US005251189A

United States Patent [19]

Thorp

[11] Patent Number: 5,251,189

[45] Date of Patent: Oct. 5, 1993

[54] **WRISTWATCH RADIOTELEPHONE**

[75] Inventor: **Christopher S. Thorp**, Mystic, Conn.

[73] Assignee: **Timex Corporation**, Middlebury, Conn.

[21] Appl. No.: **962,353**

[22] Filed: **Oct. 16, 1992**

[51] **Int. Cl.**[5] **G04F 8/00**; G04B 47/00; A44C 5/00

[52] **U.S. Cl.** **368/4**; 368/10; 368/282; 224/164; 224/165; 379/430

[58] **Field of Search** ..... 368/4, 10, 276, 277, 368/278, 281-282; 63/1 R, 3, 9, 21; 24/265 WS; 224/164, 165, 174; 59/79.1, 80; 379/90, 428, 430, 433

[56] **References Cited**

U.S. PATENT DOCUMENTS

704,243	7/1902	Davis	63/9
2,120,348	6/1938	Bezault	63/9
2,820,275	1/1958	Lancaster	24/265 WS
3,032,651	5/1962	Gisiger-Stahl et al.	250/14
3,940,038	2/1976	Claude	224/164
4,847,818	7/1989	Olsen	368/10

FOREIGN PATENT DOCUMENTS

289148	3/1951	Switzerland	63/9

Primary Examiner—Vit W. Miska
Attorney, Agent, or Firm—Robert R. Jackson; G. Victor Treyz

[57] **ABSTRACT**

A wristwatch radiotelephone having a plurality of substantially rigid members connected end to end in a series. The members are shaped and positioned to allow the members to be arranged in an arcuate array when the apparatus is to be worn on the wrist as a wristwatch, or in a more elongated, substantially straight array when the apparatus is to be used as a hand-held radiotelephone.
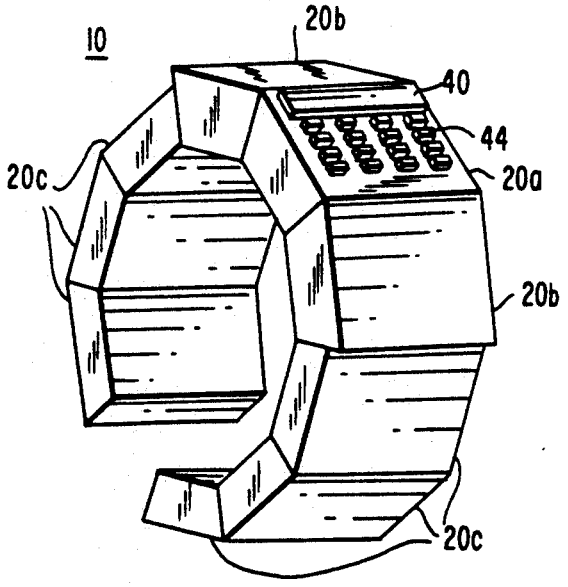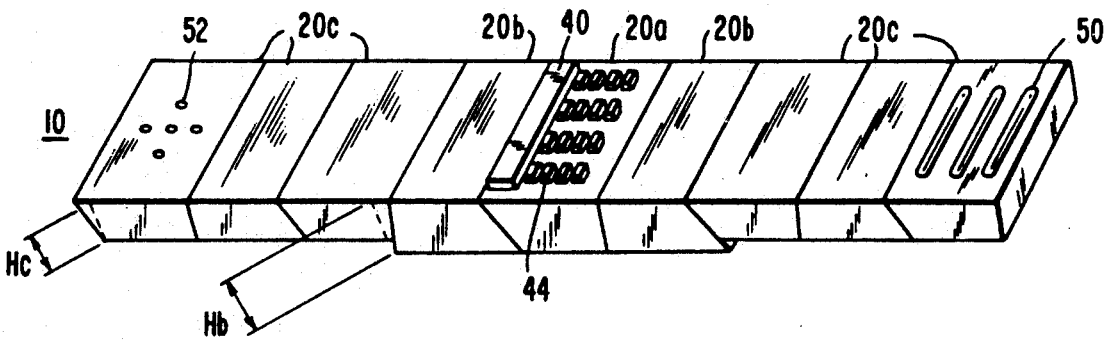
20 Claims, 3 Drawing Sheets