US006445489B1

(12) **United States Patent**
Jacobson et al.

(10) **Patent No.: US 6,445,489 B1**
(45) **Date of Patent: Sep. 3, 2002**

(54) **ELECTROPHORETIC DISPLAYS AND SYSTEMS FOR ADDRESSING SUCH DISPLAYS**

(75) Inventors: **Joseph M. Jacobson**, Newton Centre; **Paul Drzaic**, Lexington; **Barrett Comiskey**, Cambridge; **Russell J. Wilcox**, Natick; **Ian Morrison**, Acton, all of MA (US)

(73) Assignee: **E Ink Corporation**, Cambridge, MA (US)

(*) Notice: Subject to any disclaimer, the term of this patent is extended or adjusted under 35 U.S.C. 154(b) by 0 days.

(21) Appl. No.: **09/272,716**

(22) Filed: **Mar. 18, 1999**

Related U.S. Application Data

(60) Provisional application No. 60/078,363, filed on Mar. 18, 1998, and provisional application No. 60/090,232, filed on Jun. 22, 1998.

(51) **Int. Cl.**[7] **G02B 26/00**; G09G 3/34; B01D 57/02

(52) **U.S. Cl.** **359/296**; 345/107; 204/450; 204/606

(58) **Field of Search** 359/296; 345/105, 345/107, 108; 204/450, 600, 606

(56) **References Cited**

U.S. PATENT DOCUMENTS

2,800,457	A	7/1957	Green et al.
3,036,388	A	5/1962	Tate
3,384,488	A	5/1968	Tulagin et al.
3,406,363	A	10/1968	Tate
3,460,248	A	8/1969	Tate
3,585,381	A	6/1971	Hodson et al.
3,612,758	A	10/1971	Evans et al.
3,668,106	A	6/1972	Ota
3,670,323	A	6/1972	Sobel et al.
3,756,693	A	9/1973	Ota
3,767,392	A	10/1973	Ota
3,772,013	A	11/1973	Wells

(List continued on next page.)

FOREIGN PATENT DOCUMENTS

DE	44 31 441 C1	2/1996
DE	195 00 694 A1	8/1996
EP	0 186 710 A1	7/1986
EP	0 323 656 B1	7/1987
EP	0 240 063 B1	10/1987
EP	0 268 877 A2	6/1988
EP	0 281 204 A2	9/1988
EP	0 325 013 A1	7/1989
EP	0 325 013 B1	7/1989
EP	0 344 367 B1	12/1989

(List continued on next page.)

OTHER PUBLICATIONS

Microencapsulation: Processes and Applications, Jan. E. Vandegaer, ed., American Chemical Society Symposium, Chicago, IL, 1973, pp. v–x, 1–180 (published by Plenum Press, New York, 1974).

Dabbousi et al., "Electroluminescence from CdSe Quantun–dot/Polymer Composites," *Applied Physics Letters,* 1995, vol. 66, No. 11, (pp. 1316–1318).

(List continued on next page.)

Primary Examiner—Loha Ben

(74) *Attorney, Agent, or Firm*—Testa, Hurwitz & Thibeault, LLP

(57) **ABSTRACT**

Electrophoretic displays include a light-emitting layer, a photoconductive layer, and an electrophoretic layer. The light-emitting layer may be an organic, light-emitting material, or organic, light-emitting diode, which is addressable using a multiplex addressing drive scheme. The impedance of the photoconductive layer is lowered when struck by light from the light-emitting layer. As a result of the lowered impedance of the photoconductive layer, the electrophoretic layer, which itself cannot be multiplexed, is addressed at a lower, subthreshold voltage.
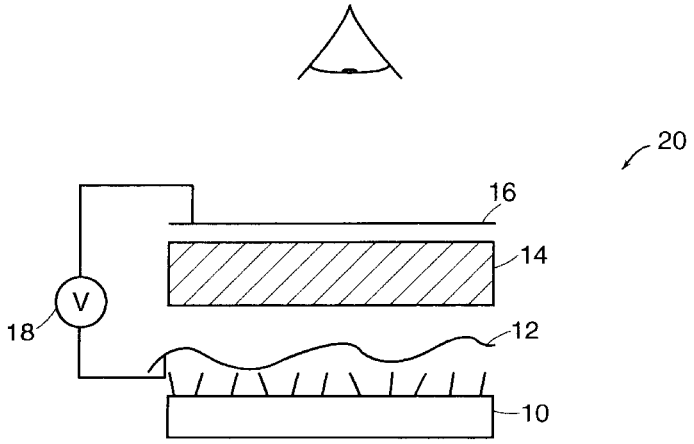
42 Claims, 5 Drawing Sheets