# United States Patent [19]

**Endfield et al.**

[11] **4,443,789**

[45] **Apr. 17, 1984**


[54] **KEYBOARD**


[75] Inventors: **Cyril Endfield**, London; **Christopher J. Rainey**, Croydon, both of England

[73] Assignee: **Microwriter Limited**, London, England



[21] Appl. No.: **320,925**

[22] Filed: **Nov. 13, 1981**

**Related U.S. Application Data**

[63] Continuation of Ser. No. 973,628, Dec. 27, 1978, abandoned, which is a continuation of Ser. No. 743,291, Nov. 18, 1976, abandoned, which is a continuation of Ser. No. 542,055, Jan. 17, 1975, abandoned.

[30] **Foreign Application Priority Data**

Jan. 22, 1974 [GB] United Kingdom ..... 2915/74

[51] **Int. Cl.**[3] ..... **G06F 3/02**

[52] **U.S. Cl.** ..... **340/365 R**; 340/365 S; 400/479; 400/486

[58] **Field of Search** ..... 340/365 R, 365 S; 178/17 C, 21; 179/90 K; 400/485, 486, 90, 89, 477, 479, 472, 489



[56] **References Cited**

U.S. PATENT DOCUMENTS

| | | | |
|---|---|---|---|
| 2,581,665 | 1/1952 | Jarmann | 340/365 R |
| 2,682,046 | 6/1954 | Hack | 340/365 R |
| 3,022,878 | 2/1962 | Seibel et al. | 340/365 R |
| 3,428,747 | 2/1969 | Alferieff | 340/365 R |
| 3,675,513 | 7/1972 | Flanagan et al. | 179/2 DP |
| 3,833,765 | 9/1974 | Hilborn et al. | 340/365 R |
| 3,892,915 | 7/1975 | Budworth et al. | 340/365 S |

FOREIGN PATENT DOCUMENTS

| | | |
|---|---|---|
| 1343913 | 11/1962 | France . |
| 475292 | 11/1937 | United Kingdom . |
| 875275 | 8/1961 | United Kingdom . |
| 1015466 | 12/1965 | United Kingdom . |
| 1105116 | 3/1968 | United Kingdom . |
| 1292113 | 10/1969 | United Kingdom . |
| 1170570 | 11/1969 | United Kingdom . |
| 1290966 | 9/1972 | United Kingdom . |
| 1318490 | 5/1973 | United Kingdom . |
| 1456229 | 11/1976 | United Kingdom . |

OTHER PUBLICATIONS

*European Scientific Notes*, Apr. 30, 1978, ESN32-4, pp. 149-151.

"Alpha-Dot: A New Approach to Direct Computer Entry of Battlefield Data", U.S. Army, Jan. 1974.



*Primary Examiner*—James J. Groody

*Attorney, Agent, or Firm*—LeBlanc, Nolan, Shur & Nies



[57] **ABSTRACT**

Disclosed herein is an electrical keyboard having five keys arranged conveniently for the fingers of an operators hand, a memory to store the signals from each key, logic circuit to instruct said stored data after release of the last of said keys and an encoder to receive said stored signals and produce electrical output signals corresponding to readable characters; each character signal requiring a single operation of a unique combination of said input keys for production of said signal.

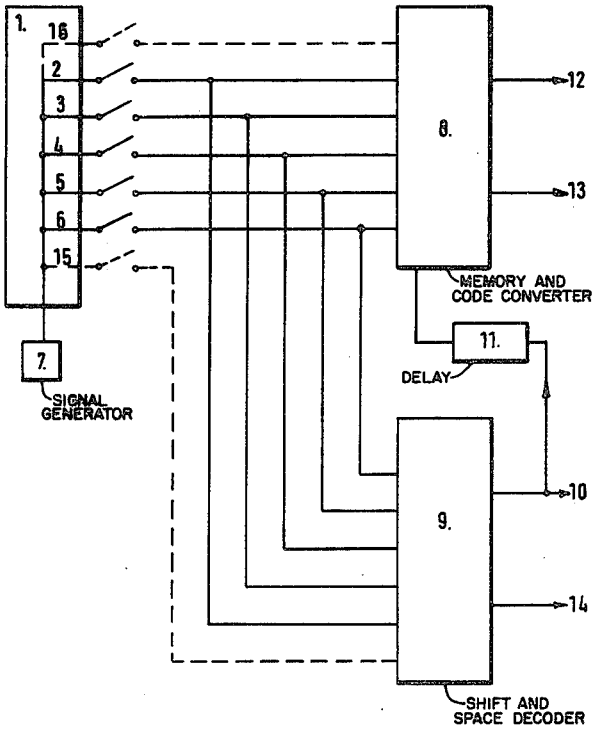
**20 Claims, 4 Drawing Figures**