US009638489B1

(12) **United States Patent**
Long

(10) **Patent No.: US 9,638,489 B1**
(45) **Date of Patent: May 2, 2017**

(54) **BOW STRING RELEASE**

(71) Applicant: **Robert M. Long**, Mokelumne Hill, CA (US)

(72) Inventor: **Robert M. Long**, Mokelumne Hill, CA (US)

(*) Notice: Subject to any disclaimer, the term of this patent is extended or adjusted under 35 U.S.C. 154(b) by 0 days.

(21) Appl. No.: **14/608,129**

(22) Filed: **Jan. 28, 2015**

Related U.S. Application Data

(60) Provisional application No. 61/937,418, filed on Feb. 7, 2014.

(51) **Int. Cl.**
F41B 5/18 (2006.01)
F41B 5/14 (2006.01)

(52) **U.S. Cl.**
CPC ***F41B 5/1469*** (2013.01)

(58) **Field of Classification Search**
CPC F41B 5/1469
USPC 124/35.2
See application file for complete search history.

(56) **References Cited**

U.S. PATENT DOCUMENTS

2,977,952 A 4/1961 Gabriel et al.
3,800,774 A 4/1974 Troncoso
3,845,752 A 11/1974 Barner
4,009,703 A 3/1977 Cunningham, Sr.
4,672,945 A 6/1987 Carlton
4,674,469 A * 6/1987 Peck F41B 5/1438 124/32
4,881,516 A * 11/1989 Peck F41B 5/1469 124/35.2
5,067,472 A * 11/1991 Vogel F41B 5/1469 124/35.2
5,205,268 A * 4/1993 Savage F41B 5/14 124/24.1
5,224,463 A * 7/1993 Townsend F41B 5/1469 124/31
5,243,957 A * 9/1993 Neilson F41B 5/10 124/25.6
5,318,004 A * 6/1994 Peck F41B 5/1469 124/35.2
5,448,983 A * 9/1995 Scott F41B 5/1469 124/35.2
5,494,023 A * 2/1996 Kolak F41B 5/1469 124/32
5,575,269 A * 11/1996 Harklau F41B 5/1469 124/32
5,941,225 A * 8/1999 Tentler F41B 5/1469 124/35.2
6,058,920 A * 5/2000 Tentler F41B 5/1469 124/35.2

(Continued)

Primary Examiner — Alexander Niconovich
(74) *Attorney, Agent, or Firm* — Albert W. Watkins

(57) **ABSTRACT**

A bow string release has a housing encasing a battery, circuit board, mechanical linkage, and a trigger to actuate the mechanical linkage. The trigger and circuit board operatively energize an electro-mechanical device such as a solenoid, which produces linear motion. A roller terminating the solenoid engages a pivotal drive cam to convert the linear motion into rotary motion. A follower link couples the pivotal drive cam to a string hook. Proper arrangement of the linkages ensures a slight over-center biasing of the linkages to securely hold a bow string, while also ensuring that only a minimal force generated by the solenoid will be required to release the string.
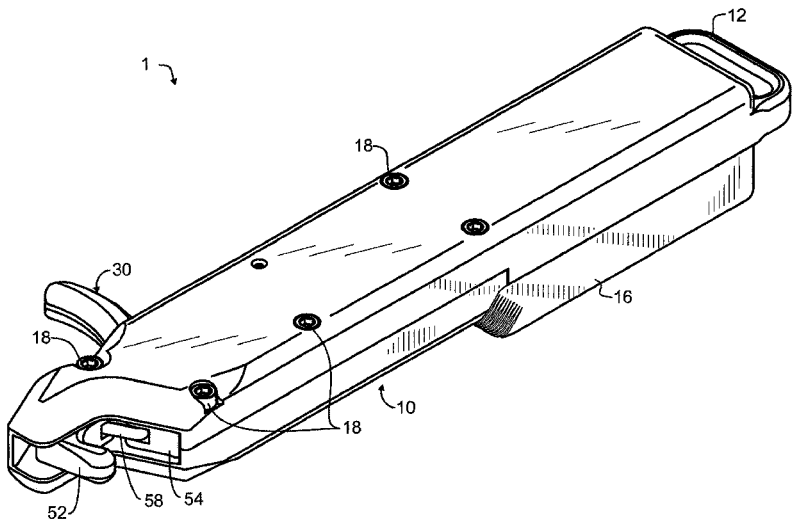
17 Claims, 5 Drawing Sheets