US009636789B2

(12) **United States Patent**
Holmes et al.

(10) **Patent No.: US 9,636,789 B2**
(45) **Date of Patent: May 2, 2017**

(54) **TURBOMACHINE BUCKET DISPLACEMENT APPARATUS AND METHOD OF USE**

(71) Applicant: **General Electric Company**, Schenectady, NY (US)

(72) Inventors: **James Bradford Holmes**, Fountain Inn, SC (US); **James Robert Hollis**, Greenville, SC (US); **David Randolph Spracher**, Simpsonville, SC (US); **Wayne David Sullivan**, Wilmington, NC (US)

(73) Assignee: **General Electric Company**, Schenectady, NY (US)

(*) Notice: Subject to any disclaimer, the term of this patent is extended or adjusted under 35 U.S.C. 154(b) by 0 days.

(21) Appl. No.: **15/171,554**

(22) Filed: **Jun. 2, 2016**

(65) **Prior Publication Data**

US 2016/0271743 A1 Sep. 22, 2016

Related U.S. Application Data

(62) Division of application No. 14/277,222, filed on May 14, 2014, now Pat. No. 9,381,602.

(51) **Int. Cl.**
B23P 15/04 (2006.01)
B23P 19/027 (2006.01)
(Continued)

(52) **U.S. Cl.**
CPC ***B23P 15/04*** (2013.01); ***B23P 15/02*** (2013.01); ***B23P 19/027*** (2013.01); ***B23P 19/04*** (2013.01);
(Continued)

(58) **Field of Classification Search**
CPC Y10T 29/53983; Y10T 29/5383; B23P 19/006; B23P 19/027; B23P 6/002;
(Continued)

(56) **References Cited**

U.S. PATENT DOCUMENTS

4,455,730 A * 6/1984 Guenther B23P 15/02 29/252
5,031,311 A * 7/1991 Comensoli B23P 19/025 29/426.4
6,416,286 B1 * 7/2002 Roberts B23P 15/006 29/889.21
6,494,683 B1 * 12/2002 Nolan B23K 9/0026 29/889.1
6,571,471 B2 * 6/2003 Hohmann B23P 6/002 29/426.5
7,128,537 B2 * 10/2006 Anner B23P 6/002 416/239
7,455,505 B2 * 11/2008 Hartmann B23P 6/002 29/889.1
7,934,302 B2 * 5/2011 Kalmar F01D 5/005 29/281.1
9,381,602 B2 * 7/2016 Holmes B23P 19/027
9,382,801 B2 * 7/2016 Cassidy F01D 5/005
9,429,041 B2 * 8/2016 Holmes B25B 27/14
(Continued)

FOREIGN PATENT DOCUMENTS

KR WO 2005054631 A1 * 6/2005 ..... B25B 27/02

Primary Examiner — Jason L Vaughan
(74) *Attorney, Agent, or Firm* — Ernest G. Cusick; Hoffman Warnick LLC

(57) **ABSTRACT**

Various embodiments include methods adapted to displace turbomachine components from a location within a turbomachine. In some embodiments, a method of displacing a turbine bucket from a turbomachine wheel slot using a displacement apparatus, includes: detachably engaging an engagement arm of the displacement apparatus to the turbine bucket, the engagement arm attached to a linear actuator coupled to a body of the displacement apparatus, and the engagement arm adapted to be actuated in a first axial direction by the linear actuator; contacting the turbomachine wheel with at least two contacting portions of the body of the displacement apparatus; and displacing the turbine bucket from a position within a slot of the turbomachine wheel in the first axial direction by linearly actuating the engagement arm with the linear actuator.
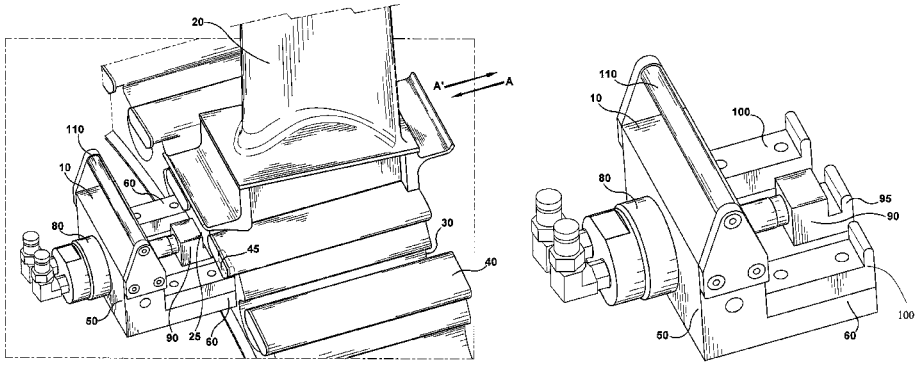
9 Claims, 5 Drawing Sheets