US009914389B2

(12) **United States Patent**
Ehrlich et al.

(10) **Patent No.: US 9,914,389 B2**
(45) **Date of Patent: Mar. 13, 2018**

(54) **THEFT DETERRENT VEHICLE LAMP MOUNT SYSTEM**

(71) Applicant: **Wabash National, L.P.**, Lafayette, IN (US)

(72) Inventors: **Rodney P. Ehrlich**, Oxford, IN (US); **Jeffrie Scott Bauer**, Monticello, IN (US)

(73) Assignee: **Wabash National, L.P.**, Lafayette, IN (US)

(*) Notice: Subject to any disclaimer, the term of this patent is extended or adjusted under 35 U.S.C. 154(b) by 0 days.

(21) Appl. No.: **15/190,648**

(22) Filed: **Jun. 23, 2016**

(65) **Prior Publication Data**

US 2016/0375822 A1 Dec. 29, 2016

Related U.S. Application Data

(60) Provisional application No. 62/184,662, filed on Jun. 25, 2015.

(51) **Int. Cl.**

B60Q 1/00	(2006.01)
B60Q 3/00	(2017.01)
B60Q 1/26	(2006.01)
B60R 25/00	(2013.01)
F21S 8/10	(2006.01)
F21V 15/00	(2015.01)
F21Y 115/10	(2016.01)

(52) **U.S. Cl.**
CPC ***B60Q 1/2623*** (2013.01); ***B60Q 1/263*** (2013.01); ***B60R 25/00*** (2013.01); ***F21S 48/212*** (2013.01); ***F21S 48/215*** (2013.01); ***F21S 48/33*** (2013.01); ***F21V 15/005*** (2013.01); *F21Y 2115/10* (2016.08)

(58) **Field of Classification Search**
CPC ... B06Q 1/26; B06Q 1/30; B06Q 1/00; B06Q 3/00
USPC 362/485, 540, 549, 548
See application file for complete search history.

(56) **References Cited**

U.S. PATENT DOCUMENTS

3,806,721	A	4/1974	Murphy, Jr.	
6,332,697	B2	12/2001	Soga et al.	
7,819,566	B2	10/2010	Kolstee et al.	
8,511,874	B2	8/2013	Nakada	
2012/0250340	A1*	10/2012	Nichols	F21V 15/005 362/485
2014/0321134	A1*	10/2014	Bauer	B60Q 1/32 362/485

* cited by examiner

Primary Examiner — Daniel Hess
(74) *Attorney, Agent, or Firm* — Quarles & Brady LLP

(57) **ABSTRACT**

A theft-deterrent lamp system for use with a vehicle includes a grommet and a cover. The lamp system is configured to mount with the vehicle and receive a lamp to couple the lamp with the vehicle. The lamp system is arranged to block the lamp from being separated from the vehicle without removing a portion of the lamp system from the vehicle.
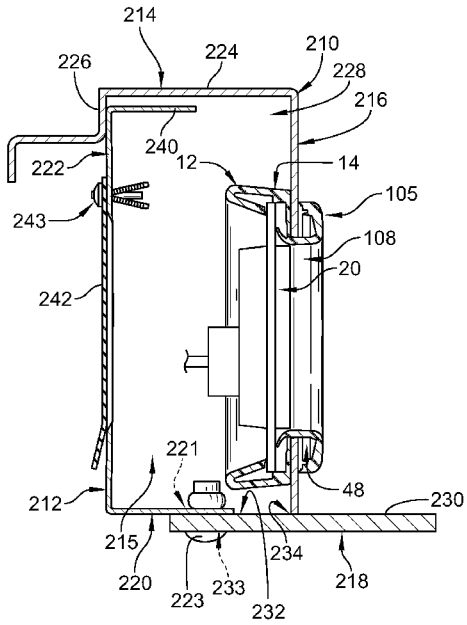
20 Claims, 6 Drawing Sheets