US006311789B1

(12) **United States Patent**
Saxman

(10) **Patent No.: US 6,311,789 B1**
(45) **Date of Patent: Nov. 6, 2001**

(54) **BIT BREAKERS, BITS, SYSTEMS, AND METHODS WITH IMPROVED MAKEUP/ BREAKOUT ENGAGEMENT**

(75) Inventor: **William C. Saxman**, Cedar Hill, TX (US)

(73) Assignee: **Halliburton Energy Services, Inc.**, Carrolton, TX (US)

(*) Notice: Subject to any disclaimer, the term of this patent is extended or adjusted under 35 U.S.C. 154(b) by 0 days.

(21) Appl. No.: **09/350,218**

(22) Filed: **Jul. 9, 1999**

Related U.S. Application Data

(60) Provisional application No. 60/093,225, filed on Jul. 17, 1998.

(51) **Int. Cl.**[7] **E21B 7/00**

(52) **U.S. Cl.** **175/57**; 175/85; 81/57.16; 81/57.2; 269/209

(58) **Field of Search** 175/424, 327, 175/331, 336, 85, 57, 315; 81/57.16, 57.2, 57.21, 57.34; 269/207, 203, 209; 173/164

(56) **References Cited**

U.S. PATENT DOCUMENTS

3,363,706 * 1/1968 Feenstra 175/340
3,722,603 * 3/1973 Brown 173/159
4,006,788 * 2/1977 Garner 175/330
4,030,557 * 6/1977 Alvis et al. 175/4.5
4,057,887 * 11/1977 Jones et al. 29/240
4,174,759 * 11/1979 Arbuckle 175/67
4,296,820 10/1981 Loftis .
4,352,399 10/1982 Davis .
4,453,836 * 6/1984 Klima 384/94
4,495,840 1/1985 Freitag et al. .
4,694,551 * 9/1987 Mathews 29/402.08
4,924,954 5/1990 Mead .
5,033,559 7/1991 Fischer .
5,644,956 7/1997 Blackman et al. .
5,791,422 * 8/1998 Liang et al. 175/374
5,839,525 11/1998 Hoffmaster et al. .

* cited by examiner

Primary Examiner—Victor Batson
(74) *Attorney, Agent, or Firm*—Groover & Associates; Robert Groover; Betty Formby

(57) **ABSTRACT**

A bit breaker is formed of a U-shaped base and latchable gate which closes the U. When the gate is in a closed position, evenly spaced chocks on both the base and gate protrude into the central cavity of the bit breaker to engage slots formed in the bit. The bit breaker is designed to be used with either roller cone bits or drag bits.
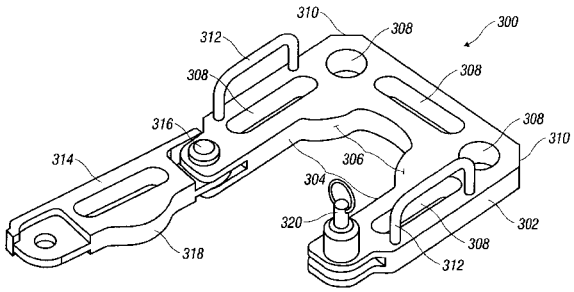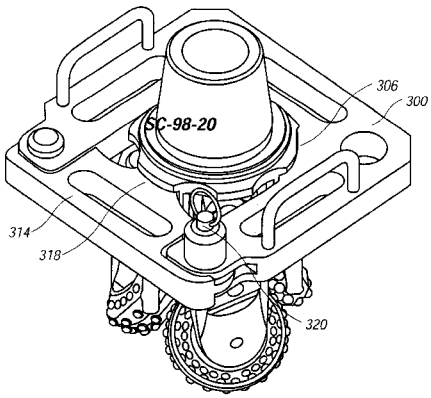
24 Claims, 11 Drawing Sheets