US009411089B2

(12) **United States Patent**
Nam et al.

(10) **Patent No.: US 9,411,089 B2**
(45) **Date of Patent: Aug. 9, 2016**

(54) **LIGHT SOURCE MODULE AND BACKLIGHT UNIT HAVING THE SAME**

(71) Applicant: **SEOUL SEMICONDUCTOR CO., LTD.**, Ansan-si (KR)

(72) Inventors: **Ki Bum Nam**, Ansan-si (KR); **Yu Dae Han**, Ansan-si (KR); **Chung Hoon Lee**, Ansan-si (KR)

(73) Assignee: **Seoul Semiconductor Co., Ltd.**, Ansan-si (KR)

(*) Notice: Subject to any disclaimer, the term of this patent is extended or adjusted under 35 U.S.C. 154(b) by 49 days.

(21) Appl. No.: **14/472,542**

(22) Filed: **Aug. 29, 2014**

(65) **Prior Publication Data**

US 2015/0062966 A1 Mar. 5, 2015

(30) **Foreign Application Priority Data**

Aug. 29, 2013 (KR) 10-2013-0103207

(51) **Int. Cl.**

F21V 8/00	(2006.01)
H01L 33/20	(2010.01)
H01L 33/46	(2010.01)
F21Y 101/02	(2006.01)
H01L 33/50	(2010.01)

(52) **U.S. Cl.**

CPC ***G02B 6/0031*** (2013.01); ***H01L 33/20*** (2013.01); ***H01L 33/46*** (2013.01); *F21Y 2101/02* (2013.01); *G02B 6/0073* (2013.01); *G02B 6/0083* (2013.01); *H01L 33/505* (2013.01); *H01L 2224/14* (2013.01)

(58) **Field of Classification Search**

CPC G02B 6/0031; G02B 6/0073; H01L 33/20; H01L 33/46; H01L 33/505; H01L 2224/14

USPC 362/612, 613, 311.02, 249.02, 608, 362/609, 610

See application file for complete search history.

(56) **References Cited**

U.S. PATENT DOCUMENTS

6,784,460	B2 *	8/2004	Ng	H01L 33/20 257/100
2005/0023545	A1 *	2/2005	Camras	H01L 33/58 257/98
2007/0258246	A1 *	11/2007	Leatherdale	G02B 5/04 362/326
2010/0156657	A1 *	6/2010	Lee	G02B 6/0028 340/815.4
2011/0079807	A1 *	4/2011	Chen	H01L 33/58 257/98
2012/0280261	A1 *	11/2012	Tarsa	H01L 33/20 257/98
2012/0293730	A1 *	11/2012	Ueyama	G02B 6/0068 348/790

* cited by examiner

Primary Examiner — Laura Tso

(74) *Attorney, Agent, or Firm* — H.C. Park & Associates, PLC

(57) **ABSTRACT**

A light source module includes a circuit board, board pads disposed on the circuit board, and a light emitting diode chip disposed on the board pads. The light emitting diode chip includes a substrate and a semiconductor stacking part disposed between the substrate and the circuit board, and the substrate includes an inclined part disposed at an upper portion thereof and a discharging part disposed at one side surface thereof.
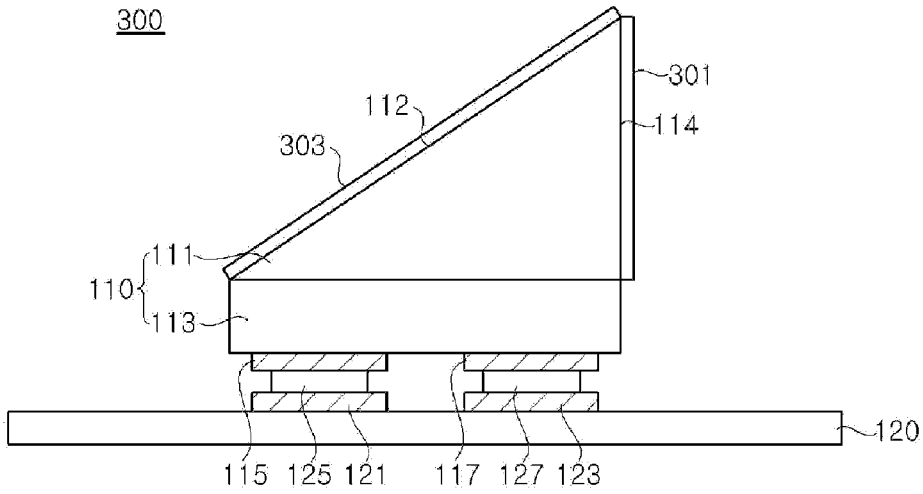
18 Claims, 4 Drawing Sheets