US008511089B2

(12) **United States Patent**
Bastnagel et al.

(10) **Patent No.: US 8,511,089 B2**
(45) **Date of Patent: Aug. 20, 2013**

(54) **RELIEF SLOT FOR COMBUSTION LINER**

(75) Inventors: **Philip Michael Bastnagel**, Indianapolis, IN (US); **Jack Dwayne Petty**, Indianapolis, IN (US)

(73) Assignee: **Rolls-Royce Corporation**, Indianapolis, IN (US)

(*) Notice: Subject to any disclaimer, the term of this patent is extended or adjusted under 35 U.S.C. 154(b) by 1045 days.

(21) Appl. No.: **12/533,467**

(22) Filed: **Jul. 31, 2009**

(65) **Prior Publication Data**

US 2011/0023496 A1 Feb. 3, 2011

(51) **Int. Cl.**
F23R 3/002 (2006.01)

(52) **U.S. Cl.**
USPC **60/752**; 60/754

(58) **Field of Classification Search**
USPC 60/752, 754–760
See application file for complete search history.

(56) **References Cited**

U.S. PATENT DOCUMENTS

3,751,910	A		8/1973	Sweeney et al.
4,030,875	A		6/1977	Grondahl et al.
5,181,379	A		1/1993	Wakeman et al.
5,233,828	A		8/1993	Napoli
5,241,827	A		9/1993	Lampes
5,261,223	A		11/1993	Foltz
5,279,127	A		1/1994	Napoli
5,850,895	A	*	12/1998	Evrard ..... 188/264 A
5,980,240	A	*	11/1999	Krautzig et al. 431/285
6,131,384	A	*	10/2000	Ebel 60/797
6,351,949	B1		3/2002	Rice et al.
6,547,518	B1		4/2003	Czachor et al.
6,581,386	B2		6/2003	Young et al.
6,681,577	B2	*	1/2004	Bolender et al. 60/772
6,691,515	B2		2/2004	Verdouw et al.
6,792,757	B2		9/2004	Borns et al.
7,097,422	B2	*	8/2006	Rice et al. 415/134
2008/0010997	A1	*	1/2008	Bessagnet et al. 60/805

* cited by examiner

Primary Examiner — William H Rodriguez
Assistant Examiner — Carlos A Rivera
(74) *Attorney, Agent, or Firm* — McCormick, Paulding & Huber LLP

(57) **ABSTRACT**

A combustion liner has an aft seal ring defines a relief slot in a wall of the combustion liner. The relief slot defined in the wall includes a first slot portion extending from a first end of the wall to a termination point. An arcuate slot portion intersects the termination point of the first slot portion, and a generally circular aperture is defined in the wall at each end of the arcuate slot portion.
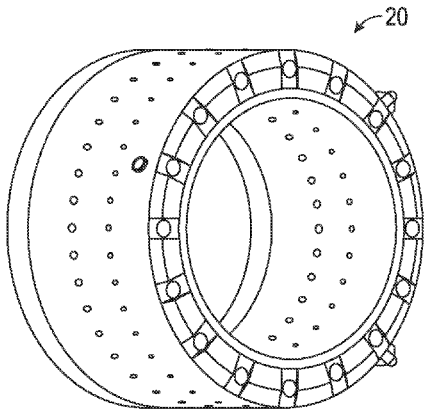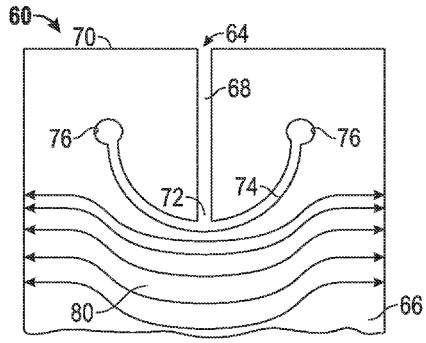
12 Claims, 3 Drawing Sheets