US009410389B2

(12) **United States Patent**
Fanini et al.

(10) **Patent No.: US 9,410,389 B2**
(45) **Date of Patent: Aug. 9, 2016**

(54) **SELF-CLEANING FLUID JET FOR DOWNHOLE CUTTING OPERATIONS**

(71) Applicant: **Baker Hughes Incorporated**, Houston, TX (US)

(72) Inventors: **Otto N. Fanini**, Houston, TX (US); **Karsten Fuhst**, Giesen (DE)

(73) Assignee: **BAKER HUGHES INCORPORATED**, Houston, TX (US)

(*) Notice: Subject to any disclaimer, the term of this patent is extended or adjusted under 35 U.S.C. 154(b) by 519 days.

(21) Appl. No.: **13/758,283**

(22) Filed: **Feb. 4, 2013**

(65) **Prior Publication Data**

US 2014/0138083 A1 May 22, 2014

Related U.S. Application Data

(63) Continuation-in-part of application No. 13/681,673, filed on Nov. 20, 2012.

(51) **Int. Cl.**
E21B 29/00 (2006.01)
E21B 49/06 (2006.01)

(52) **U.S. Cl.**
CPC ***E21B 29/002*** (2013.01); ***E21B 29/00*** (2013.01); ***E21B 49/06*** (2013.01)

(58) **Field of Classification Search**
CPC E21B 29/002; E21B 49/06; E21B 29/005; E21B 10/60; E21B 10/602; E21B 29/00
See application file for complete search history.

(56) **References Cited**

U.S. PATENT DOCUMENTS

2,482,674	A	9/1949	Kreigel	
5,539,985	A	7/1996	Wershe	
5,862,870	A	1/1999	Hutchinson	
6,527,065	B1 *	3/2003	Tibbitts	E21B 10/43 175/339
6,581,859	B2	6/2003	Adams et al.	
7,574,807	B1	8/2009	Fuller et al.	
7,575,056	B2	8/2009	Fuhst et al.	
7,909,100	B2	3/2011	Bryant, Jr. et al.	
7,987,901	B2	8/2011	Krueger et al.	
2007/0131410	A1	6/2007	Hill et al.	
2010/0065264	A1	3/2010	Nackerud	
2010/0307738	A1	12/2010	Mouget et al.	
2011/0000668	A1 *	1/2011	Tunget	166/285
2011/0192589	A1	8/2011	Fuhst et al.	
2011/0290487	A1	12/2011	Perschke et al.	
2012/0217005	A1	8/2012	Gupta	
2012/0318579	A1	12/2012	Yang et al.	
2015/0060040	A1 *	3/2015	Ruttley	166/55.1

OTHER PUBLICATIONS

For the American Heritage Dictionary definition: cupola. (n.d.) American Heritage® Dictionary of the English Language, Fifth Edition. (2011). Retrieved Jun. 26, 2015 from http://www.thefreedictionary.com/cupola.*

* cited by examiner

Primary Examiner — Blake Michener
Assistant Examiner — Wei Wang
(74) *Attorney, Agent, or Firm* — Shawn Hunter

(57) **ABSTRACT**

Devices and methods for cutting a workpiece. A cutter is provided with a fluid jet generator that creates and projects a jet of fluid proximate the cut being made in a workpiece.
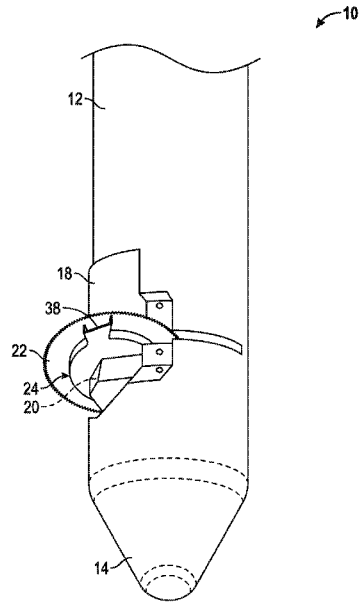
9 Claims, 14 Drawing Sheets