FIG. 1

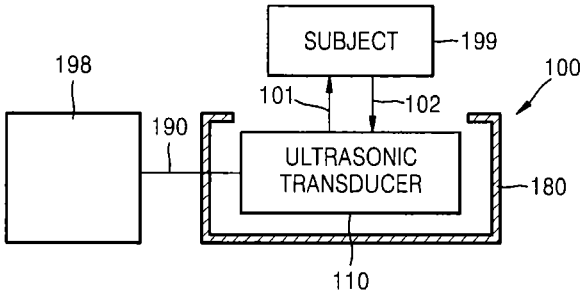
SUBJECT
199
198
100
101
102
190
ULTRASONIC
TRANSDUCER
180
110

FIG. 2

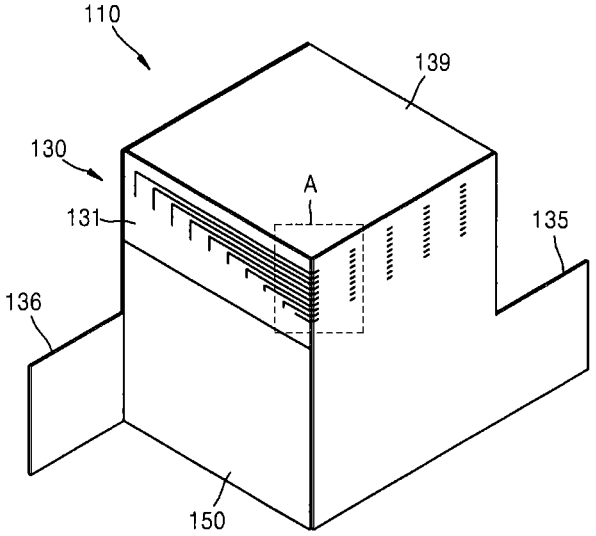
110
139
130
A
131
135
136
150