US009408589B2

(12) **United States Patent**
Ko et al.

(10) **Patent No.: US 9,408,589 B2**
(45) **Date of Patent: Aug. 9, 2016**

(54) **ULTRASONIC TRANSDUCER, ULTRASONIC PROBE, AND ULTRASOUND IMAGE DIAGNOSIS APPARATUS**

(71) Applicant: **SAMSUNG ELECTRONICS CO., LTD.**, Suwon-si, Gyeonggi-do (KR)

(72) Inventors: **Hyun-phill Ko**, Seongnam-si (KR); **Jong-mock Lee**, Yongin-si (KR)

(73) Assignee: **SAMSUNG ELECTRONICS CO., LTD.**, Suwon-Si (KR)

(*) Notice: Subject to any disclaimer, the term of this patent is extended or adjusted under 35 U.S.C. 154(b) by 395 days.

(21) Appl. No.: **13/708,186**

(22) Filed: **Dec. 7, 2012**

(65) **Prior Publication Data**

US 2013/0281857 A1 Oct. 24, 2013

(30) **Foreign Application Priority Data**

Apr. 23, 2012 (KR) 10-2012-0042179

(51) **Int. Cl.**

A61B 8/00	(2006.01)
H01L 41/047	(2006.01)
A61B 8/14	(2006.01)
A61B 8/08	(2006.01)
H01L 41/25	(2013.01)
B06B 1/06	(2006.01)

(52) **U.S. Cl.**

CPC ***A61B 8/4494*** (2013.01); ***A61B 8/14*** (2013.01); ***A61B 8/4444*** (2013.01); ***A61B 8/5207*** (2013.01); ***B06B 1/0629*** (2013.01); ***H01L 41/0474*** (2013.01); ***H01L 41/25*** (2013.01); *Y10T 29/42* (2015.01)

(58) **Field of Classification Search**

CPC A61B 8/4494; A61B 8/14; A61B 8/4444; A61B 8/5207; H01L 41/0474; H01L 41/25

See application file for complete search history.

(56) **References Cited**

U.S. PATENT DOCUMENTS

448,075	A	3/1891	Rassweiler	
4,962,332	A *	10/1990	Rokurohta et al.	310/335
5,329,498	A *	7/1994	Greenstein	367/155
5,704,105	A	1/1998	Venkataramani et al.	
5,744,898	A	4/1998	Smith et al.	

(Continued)

FOREIGN PATENT DOCUMENTS

CN	1331842	1/2002
CN	1753201	3/2006

(Continued)

OTHER PUBLICATIONS

Korean Office Action for corresponding Korean Application 10-2012-0042179; dated Sep. 9, 2013.

(Continued)

Primary Examiner — Bo J Peng

(74) *Attorney, Agent, or Firm* — Staas & Halsey LLP

(57) **ABSTRACT**

An ultrasonic transducer, an ultrasonic probe, and an ultrasound image diagnosis apparatus include a plurality of piezoelectric elements arranged in at least one column; individual electrodes provided on at least one surface of top and bottom surfaces of each of the piezoelectric elements; side electrodes extending toward one side surfaces of the piezoelectric elements from the individual electrodes; and a side electrode substrate including wiring lines that are bonded to the one side surfaces of the piezoelectric elements and are electrically connected to the side electrodes, respectively.
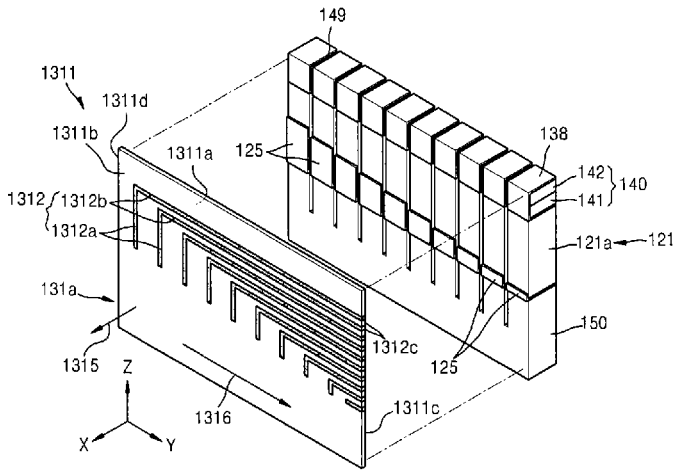
23 Claims, 24 Drawing Sheets