US009408489B2

(12) **United States Patent**
Trio

(10) **Patent No.: US 9,408,489 B2**
(45) **Date of Patent: Aug. 9, 2016**

(54) **INFUSION UNIT FOR PRODUCING COFFEE SUITABLE FOR WASHING IN THE DISHWASHER**

(75) Inventor: **Fabio Trio**, Turbenthal (CH)

(73) Assignee: **KONINKLIJKE PHILIPS N.V.**, Eindhoven (NL)

(*) Notice: Subject to any disclaimer, the term of this patent is extended or adjusted under 35 U.S.C. 154(b) by 1514 days.

(21) Appl. No.: **12/519,627**

(22) PCT Filed: **Dec. 11, 2007**

(86) PCT No.: **PCT/EP2007/010816**

§ 371 (c)(1),
(2), (4) Date: **Jun. 17, 2009**

(87) PCT Pub. No.: **WO2008/074421**

PCT Pub. Date: **Jun. 26, 2008**

(65) **Prior Publication Data**

US 2010/0064897 A1 Mar. 18, 2010

(30) **Foreign Application Priority Data**

Dec. 19, 2006 (IT) FI2006A0331

(51) **Int. Cl.**
A47J 31/06 (2006.01)
A47J 31/36 (2006.01)
B65D 85/804 (2006.01)

(52) **U.S. Cl.**
CPC ***A47J 31/3614*** (2013.01); ***A47J 31/0663*** (2013.01); *B65D 85/8043* (2013.01)

(58) **Field of Classification Search**
CPC A47J 31/56; A47J 31/42; A47J 31/3614; A47J 31/408; A47J 31/3633; A47J 31/46; A47J 31/20; A47J 31/057; A47J 31/0663; A47J 31/0573; A47J 37/0704; A47J 37/1295; B65D 85/8043; A23C 3/037
USPC ..... 99/283, 286, 289 R, 289 T, 289 D, 289 P, 99/290, 295, 297, 300, 302 R, 302 P, 304, 99/307, 399, 410; 426/474
See application file for complete search history.

(56) **References Cited**

U.S. PATENT DOCUMENTS

3,369,478	A *	2/1968	Black	99/289 R
3,552,976	A *	1/1971	King	426/433
4,681,028	A *	7/1987	Schmed et al.	99/289 R
5,259,296	A *	11/1993	Mikael et al.	99/280
6,116,147	A *	9/2000	Schmed	99/302 P
6,240,832	B1 *	6/2001	Schmed et al.	99/289 R
6,536,332	B2 *	3/2003	Schmed	99/295

FOREIGN PATENT DOCUMENTS

EP	0 559 620		9/1993	
EP	1306041	A1	5/2003	
GB	1 164 760		9/1969	
JP	7008396	A	1/1995	
JP	7289436	A	11/1995	
WO	WO 2009069167	A1 *	6/2009	A47J 31/36

* cited by examiner

Primary Examiner — Dana Ross
Assistant Examiner — Hemant Mathew

(57) **ABSTRACT**

The removable infusion unit to produce hot beverages, in particular coffee, comprises a supporting structure (**3**, **5**) mechanically connected to an infusion chamber comprising a first portion and a second portion, moving with respect to each other, and a mechanism for opening and closing said infusion chamber. The supporting structure and the opening and closing mechanism of the infusion chamber are made of materials that do not require external lubrication.
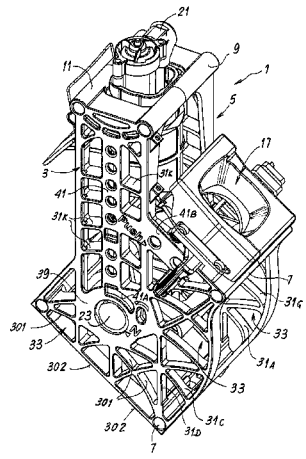
47 Claims, 5 Drawing Sheets