Sept. 7, 1965 D. S. HOWELL 3,204,689

DISPLAY PANEL ASSEMBLY

Filed May 6, 1963 2 Sheets-Sheet 1

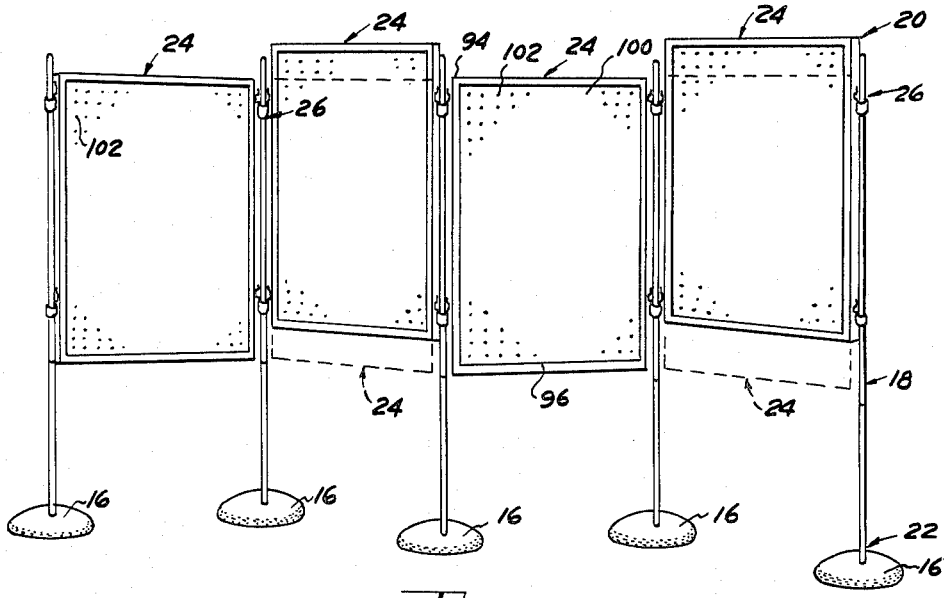

Fig. 1

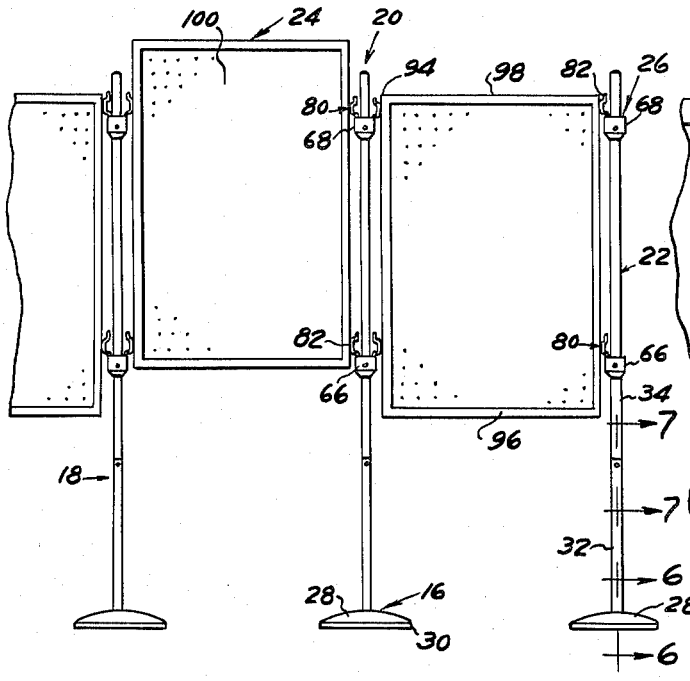

Fig. 2

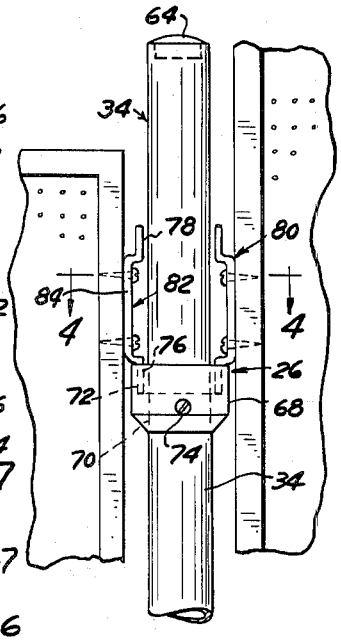

Fig. 3

INVENTOR.
DAVID S. HOWELL.
BY Barthel & Bugbee
ATTORNEYS.