US005203789A

United States Patent [19]

McDonald

[11] Patent Number: 5,203,789

[45] Date of Patent: Apr. 20, 1993

[54] FOLDABLE PLASTIC OPTICAL LENS WITH REDUCED THICKNESS LIGHT BLOCKING SEGMENTS

[75] Inventor: **Henry H. McDonald**, 65 N. Madison, Suite 810, Pasadena, Calif. 91101

[73] Assignees: **Henry H. McDonald; William W. Haefliger**, both of Pasadena, Calif. ; a part interest

[21] Appl. No.: **791,002**

[22] Filed: **Nov. 12, 1991**

[51] **Int. Cl.**[5] **A61F 2/16**

[52] **U.S. Cl.** **623/6**

[58] **Field of Search** 623/6

[56] **References Cited**

U.S. PATENT DOCUMENTS

4,605,409	8/1986	Kelman	623/6
4,786,445	11/1988	Portnoy et al.	623/6
4,813,957	3/1989	McDonald	623/6
4,834,751	5/1989	Knight et al.	623/6
4,842,602	6/1989	Nguyen	623/6
4,880,426	11/1989	Ting et al.	623/6
4,888,013	12/1989	Ting et al.	623/6
4,888,014	12/1989	Nguyen	623/6
4,894,062	1/1990	Knight et al.	623/6
4,932,970	6/1990	Portney	623/6
4,938,767	7/1990	Ting et al.	623/6
4,957,505	9/1990	McDonald	606/107
4,959,070	9/1990	McDonald	606/107
4,978,354	12/1990	Van Gent	623/6
5,030,231	7/1991	Portney	623/6
5,044,743	9/1991	Ting	623/6

Primary Examiner—Randy C. Shay
Attorney, Agent, or Firm—William W. Haefliger

[57] **ABSTRACT**

A foldable plastic lens insertable into the eye lens zone from which a natural lens has been removed comprising the plastic lens having a light passing intermediate and bead-like optical portion, and two oppositely extending haptics; the lens also having two opposed peripheral segments characterized as light blocking; and the segments having substantially reduced thickness relative to the thickness or thicknesses of the main extent of the intermediate optical portion.
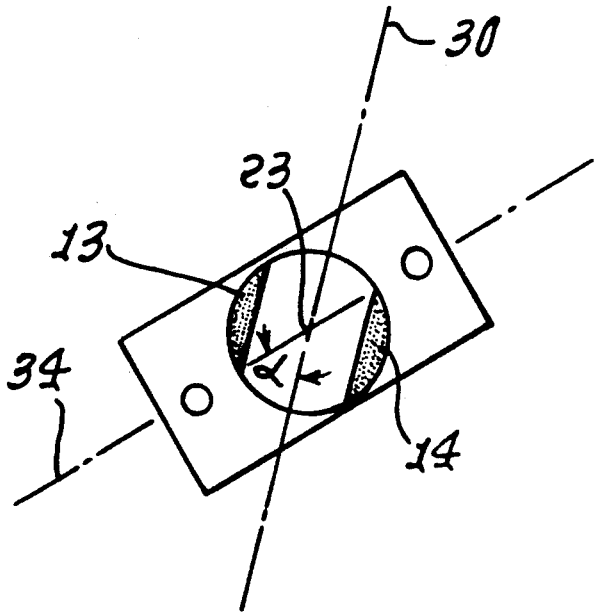
13 Claims, 4 Drawing Sheets