United States Patent [19]

Cabrera et al.

[11] **Patent Number: 4,702,889**

[45] **Date of Patent: Oct. 27, 1987**

[54] **LIQUID SAMPLING VALVE**

[75] Inventors: **Pedro P. Cabrera**, Miami; **Humberto A. Berra**, Carol City; **Edward N. Doty**, Pompano Beach, all of Fla.

[73] Assignee: **Coulter Electronics Inc.**, Hialeah, Fla.

[21] Appl. No.: **819,381**

[22] Filed: **Jan. 16, 1986**

[51] **Int. Cl.**[4] **G01N 1/20**; F16K 21/02; F16K 23/00

[52] **U.S. Cl.** **422/103**; 73/863.73; 73/864.12; 251/355

[58] **Field of Search** 422/100, 103; 73/863.72, 863.73, 864.12, 864.83; 137/240, 246, 251.1; 251/355

[56] **References Cited**

U.S. PATENT DOCUMENTS

3,885,439	5/1975	Stone	73/863.73
3,964,513	6/1976	Molner	73/863.73 X
4,152,391	5/1979	Cabrera	422/103
4,445,391	5/1984	Cabrera	422/103 X
4,458,543	7/1984	Mieth	137/240 X
4,507,977	4/1985	Cabrera	422/103 X
4,552,167	11/1985	Bräkelmann	137/240 X
4,562,748	1/1986	Mrochek et al.	73/863.73
4,587,219	5/1986	Claren et al.	422/103 X

Primary Examiner—Michael S. Marcus
Assistant Examiner—J. Johnston
Attorney, Agent, or Firm—Silverman, Cass, Singer & Winburn, Ltd.

[57] **ABSTRACT**

A liquid diluting and transfer valve has disc like valve elements provided with faces frictionally engaged. The valve further includes passageways for passing both sample liquid and rinse liquid and a continuous groove formed in one of the respective faces. This continuous groove effectively isolates the passageway openings to the faces and is capable of blocking passage of leakage material along the face to the periphery of the engaged face.
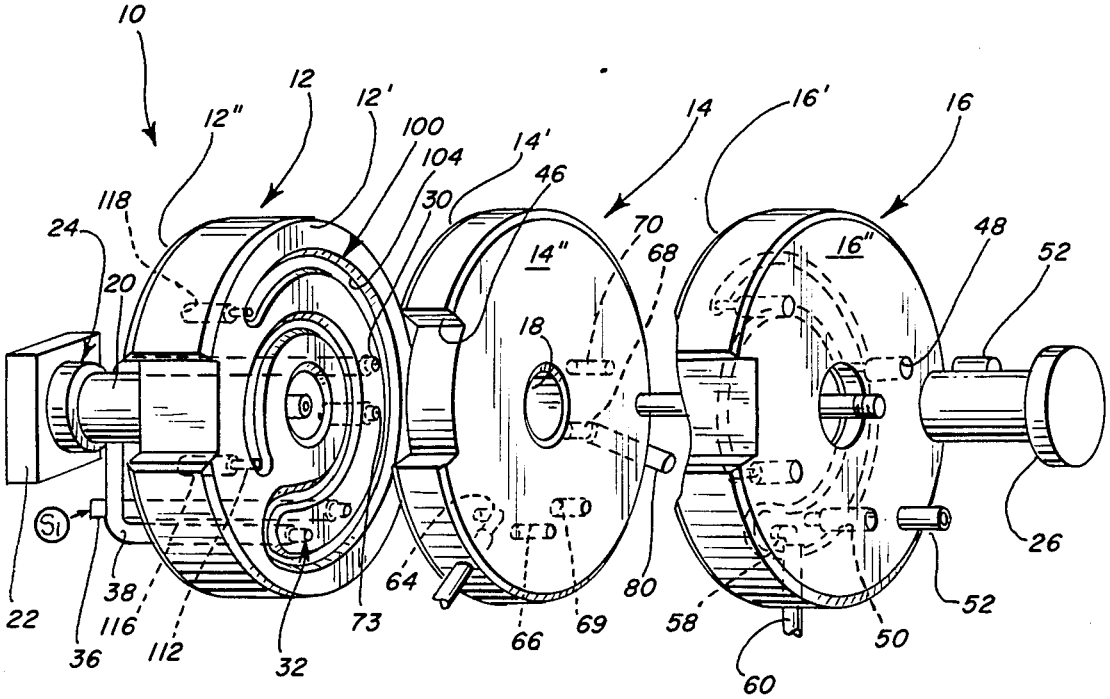
11 Claims, 10 Drawing Figures