June 17, 1924. 1,498,488

F. J. STALLINGS

PLIERS

Filed Jan. 6, 1923

FIG. 1.

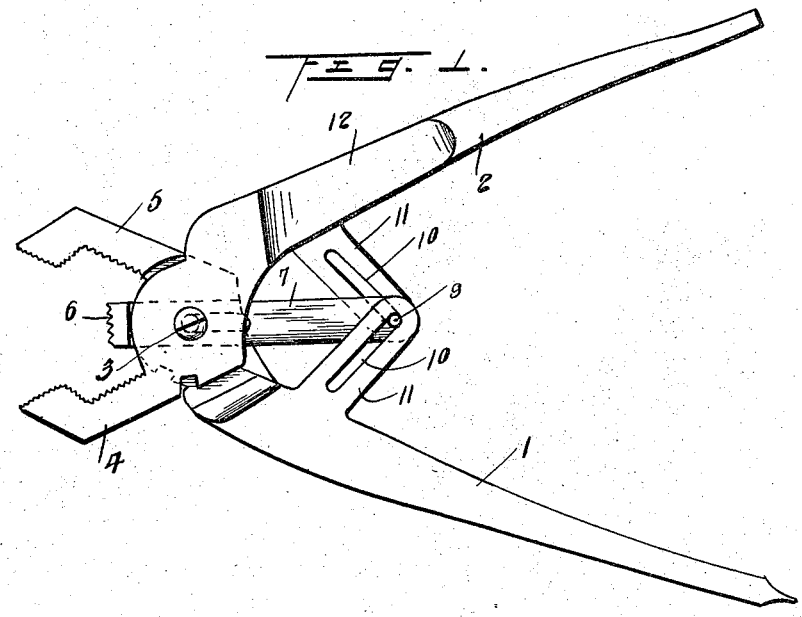

FIG. 2.

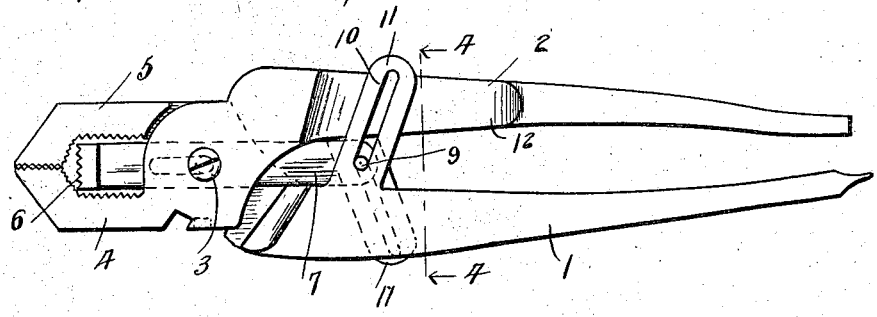

FIG. 3.

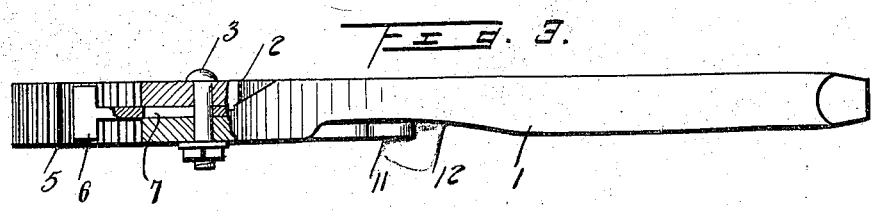

FIG. 4.

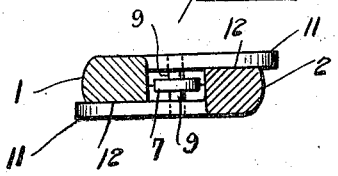

Inventor
F. J. Stallings.

By A. Randolph Jr.
Attorney