US009987188B1

(12) **United States Patent**
Diao

(10) **Patent No.: US 9,987,188 B1**
(45) **Date of Patent: Jun. 5, 2018**

(54) **METHOD AND SYSTEM FOR BODY WEIGHT SUPPORT**

(71) Applicant: **Purdue Research Foundation**, West Lafayette, IN (US)

(72) Inventor: **Xiumin Diao**, West Lafayette, IN (US)

(73) Assignee: **Purdue Research Foundation**, West Lafayette, IN (US)

(*) Notice: Subject to any disclaimer, the term of this patent is extended or adjusted under 35 U.S.C. 154(b) by 0 days. days.

(21) Appl. No.: **15/592,132**

(22) Filed: **May 10, 2017**

(51) **Int. Cl.**

A63B 21/005	(2006.01)
A61H 3/00	(2006.01)
A63B 21/00	(2006.01)
A63B 22/02	(2006.01)
A63B 23/04	(2006.01)
A63B 24/00	(2006.01)
A63B 71/06	(2006.01)

(52) **U.S. Cl.**
CPC ***A61H 3/008*** (2013.01); ***A63B 21/154*** (2013.01); ***A63B 21/4009*** (2015.10); ***A63B 22/02*** (2013.01); ***A63B 23/0405*** (2013.01); ***A63B 24/0087*** (2013.01); ***A63B 71/0622*** (2013.01); *A61H 2201/1619* (2013.01); *A61H 2205/10* (2013.01); *A63B 2220/40* (2013.01); *A63B 2220/51* (2013.01); *A63B 2220/803* (2013.01)

(58) **Field of Classification Search**
CPC A63B 71/0622; A63B 21/4009; A63B 23/0405; A63B 21/154; A63B 24/0087; A63B 2220/51; A63B 2220/803; A63B 2220/40; A63B 22/02; A63B 69/0064; A63B 21/00181; A63B 22/0221; A63B 2220/52; A63B 2024/0093; A63B 2220/18; A61B 5/6892; A61B 5/1036; A61H 3/008; A61H 2205/10; A61H 2201/1619
See application file for complete search history.

(56) **References Cited**

U.S. PATENT DOCUMENTS

3,408,067	A	*	10/1968	Armstrong	A63B 22/02 434/253
4,204,673	A	*	5/1980	Speer, Sr.	A63B 22/0012 198/817
4,423,864	A	*	1/1984	Wiik	A63B 22/0012 434/253
4,733,858	A	*	3/1988	Lan	A63B 23/1209 482/113

(Continued)

OTHER PUBLICATIONS

Lokomat manufacturer: www.beka.ru/php/content.php?id=695 date unknown.

(Continued)

Primary Examiner — Garrett Atkinson
(74) *Attorney, Agent, or Firm* — Piroozi-IP, LLC

(57) **ABSTRACT**

A body weight support (BWS) system is disclosed. The BWS system includes a harness coupled to a plurality of cables, wherein the harness is worn by a subject, an actuator for each of the plurality of cables, each actuator configured to place a tension on a corresponding cable in response to an electrical signal, at least one force sensor configured to provide an electrical signal corresponding to forces applied to the harness, at least one motion sensor configured to provide an electrical signal corresponding to changes in acceleration of the subject, and a controller configured to control the plurality of actuators.
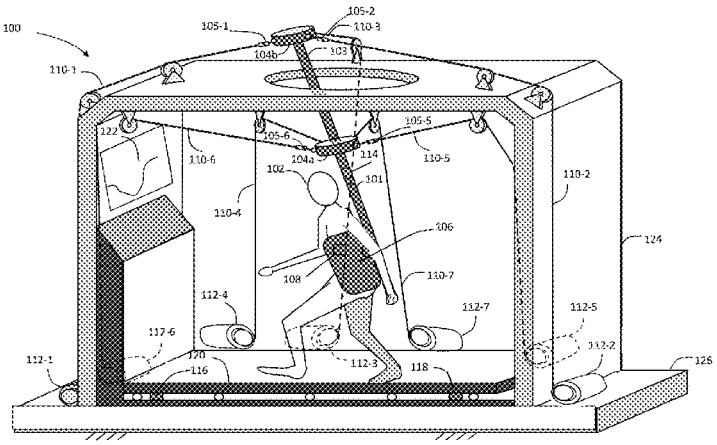
20 Claims, 6 Drawing Sheets