Fig. 1

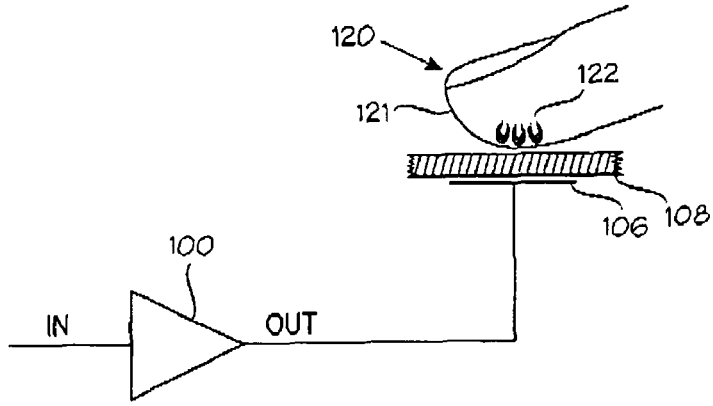
120
122
121
106
108
100
IN
OUT

Fig. 2

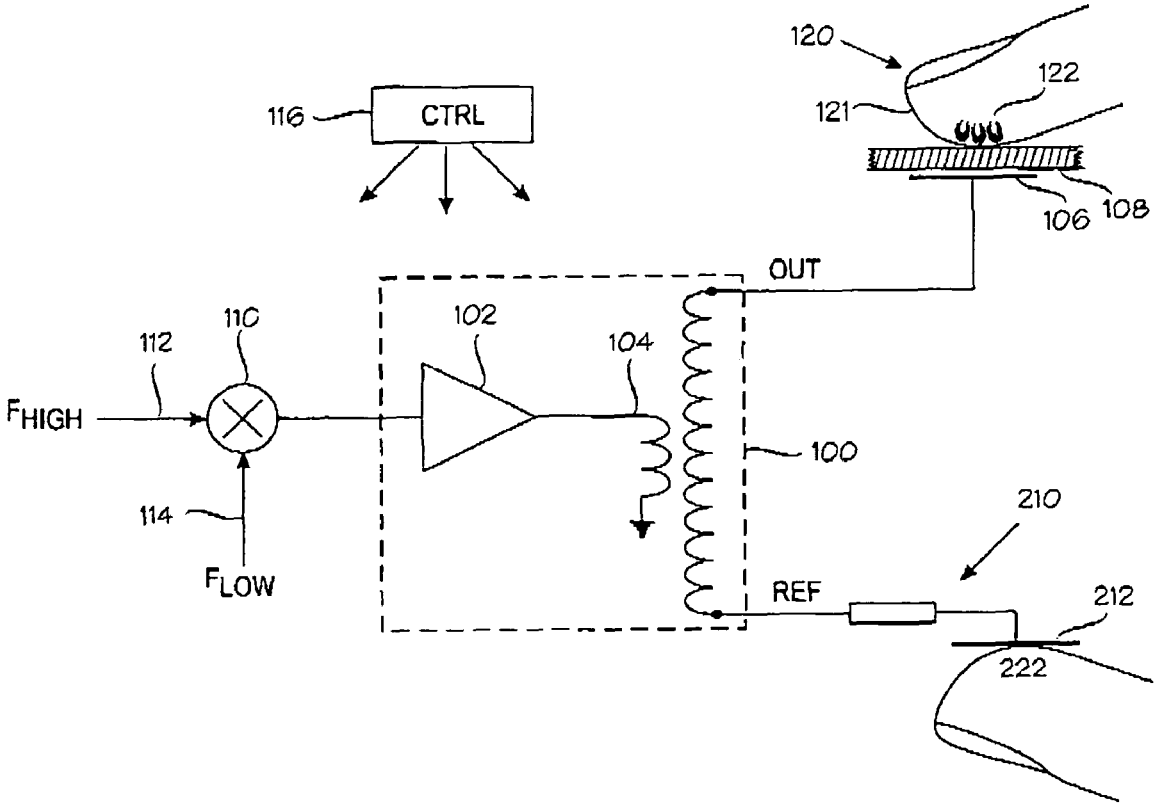
120
122
121
116
CTRL
106
108
OUT
112
110
102
104
FHIGH
100
114
FLOW
210
REF
212
222