Fig. 1

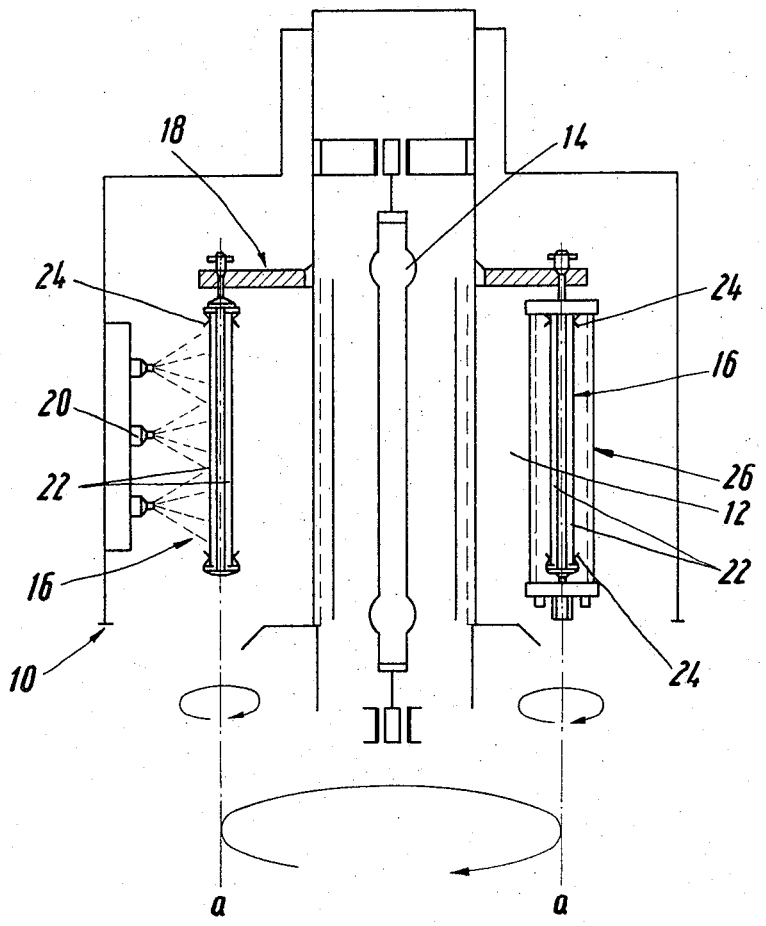

Inventor:
DIETER KOCKOTT
BY Otto John Illing
ATTORNEY