United States Patent [19]

Tatsumi et al.

[11] **Patent Number: 4,760,388**

[45] **Date of Patent: Jul. 26, 1988**

[54] **METHOD AND AN APPARATUS FOR DISPLAYING A UNIFIED PICTURE ON CRT SCREENS OF MULTIPLE DISPLAYING DEVICES**

[75] Inventors: **Yoshihiro Tatsumi**, Kashiwara; **Masaaki Nagafune; Takao Shimizu**, both of Kashihara, all of Japan

[73] Assignee: **Tatsumi Denshi Kogyo Kabushiki Kaisha**, Osaka, Japan

[21] Appl. No.: **495,663**

[22] Filed: **May 18, 1983**

[51] **Int. Cl.**[4] **G09G 1/00**

[52] **U.S. Cl.** **340/717**; 340/750; 340/801; 340/814

[58] **Field of Search** 340/720, 717, 716, 703, 340/721, 723, 705, 798, 814, 750; 358/240, 87; 364/521

[56] **References Cited**

U.S. PATENT DOCUMENTS

3,051,779	8/1962	Lakjer	358/87
3,289,196	11/1966	Hull	340/720 X
3,492,419	1/1970	Bartonik	358/87
3,623,069	11/1971	Malden	340/717
3,641,558	2/1972	Cook et al.	340/711 X
3,641,559	2/1972	Hogan et al.	340/711 X
3,644,935	2/1972	Lourie	340/798
3,705,263	12/1972	Rittenhouse	340/721 X
3,774,158	11/1973	Clark	340/717 X
3,821,730	6/1974	Carey et al.	340/791 X
3,909,525	9/1975	Fagan	358/87 X
3,941,926	3/1976	Slobodzian et al.	358/240
4,119,953	10/1978	Yeschick	340/717 X
4,262,338	4/1981	Gaudio, Jr.	340/701 X
4,297,723	10/1981	Whitby	358/87 X
4,322,726	3/1982	Collier et al.	340/701 X
4,323,896	4/1982	Fiedler et al.	358/240 X
4,368,485	1/1983	Midland	340/720 X
4,399,434	8/1983	Bielat	340/701
4,427,977	1/1984	Carollo	340/705
4,495,594	6/1985	Eggebrecht et al.	364/521 X
4,647,927	3/1987	Ichikawa et al.	340/801
4,667,190	5/1987	Fant	340/798

Primary Examiner—Marshall M. Curtis
Attorney, Agent, or Firm—Lowe, Price, LeBlanc, Becker & Shur

[57] **ABSTRACT**

A wide picture with on-the-scene feeling is displayed on multiple CRT screens by using a method which is suitable for video game machines to enhance a player's satisfaction. Data is read from a static memory and from a dynamic memory and is displayed in synchronism at corresponding points of the CRT's.
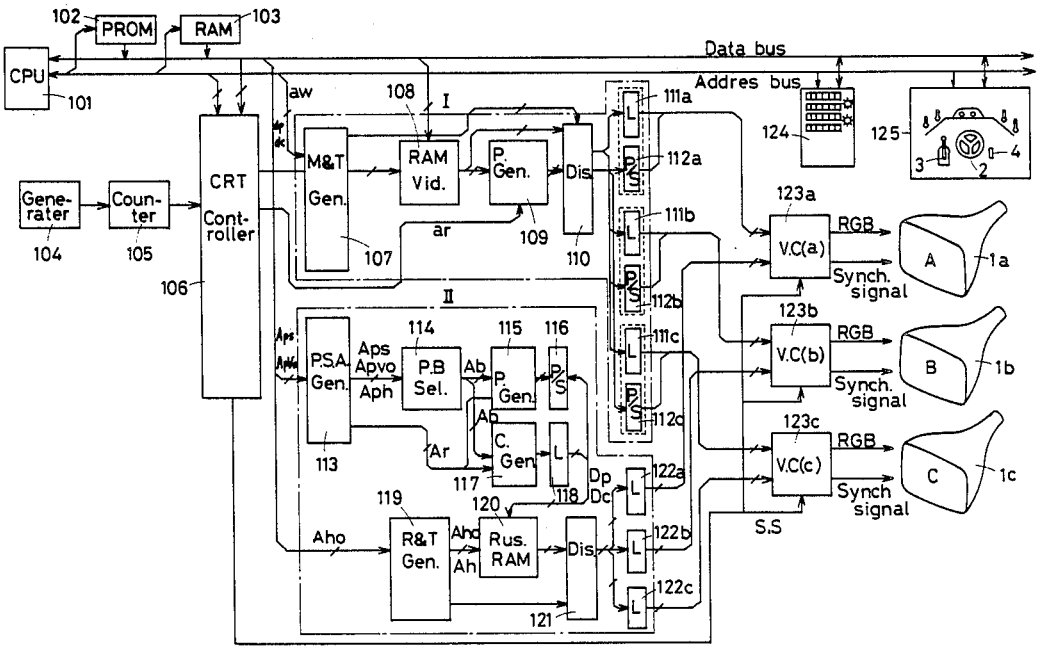
23 Claims, 8 Drawing Sheets