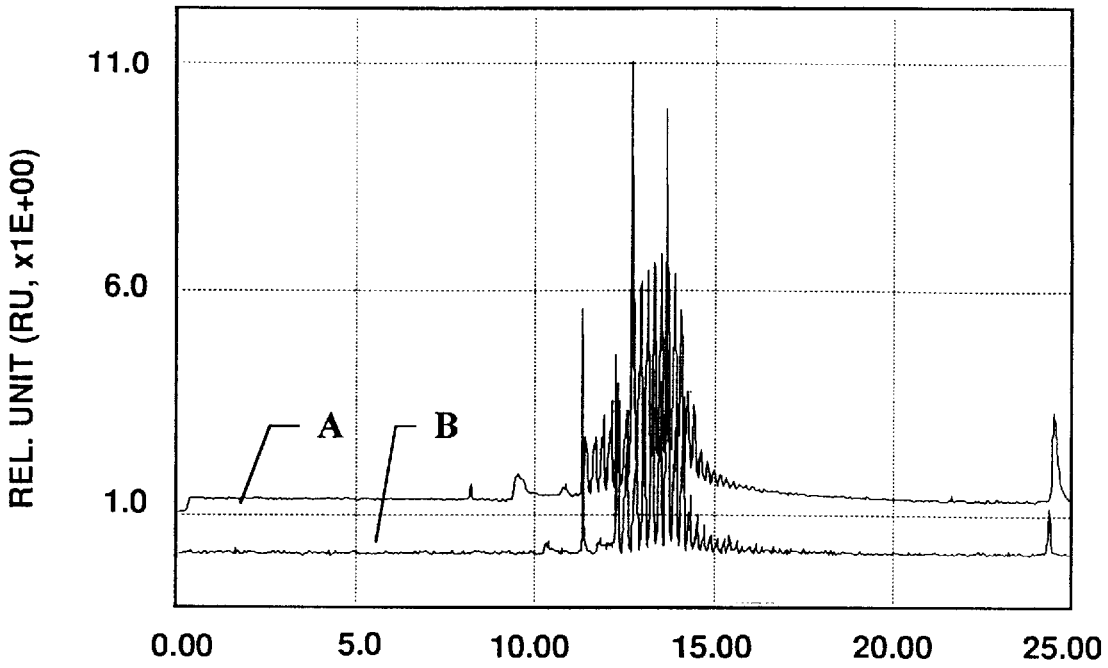
11.0
6.0
1.0
REL. UNIT (RU, x1E+00)
A
B
0.00
5.0
10.00
15.00
20.00
25.00

FIG. 1

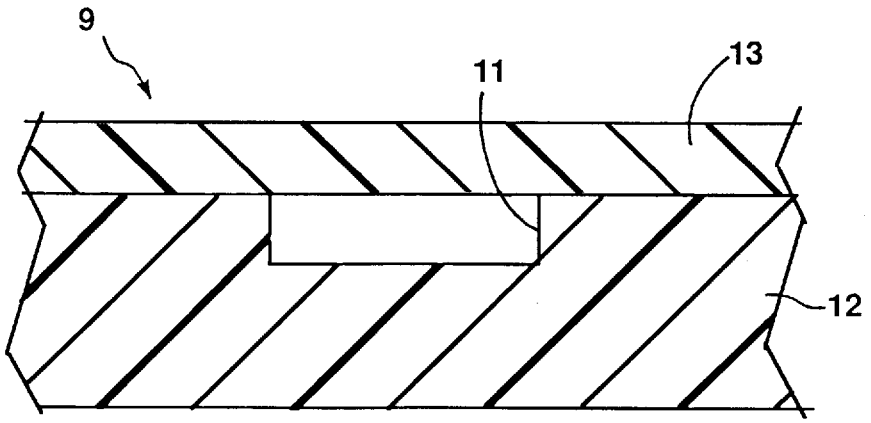
9
11
13
12

FIG. 2