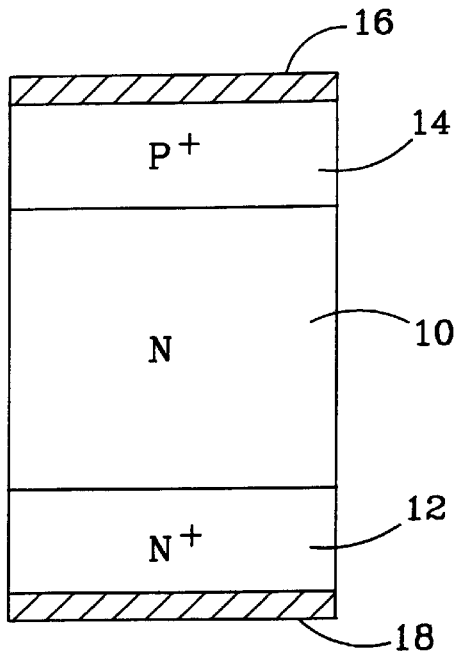

FIG.1
(Prior Art)

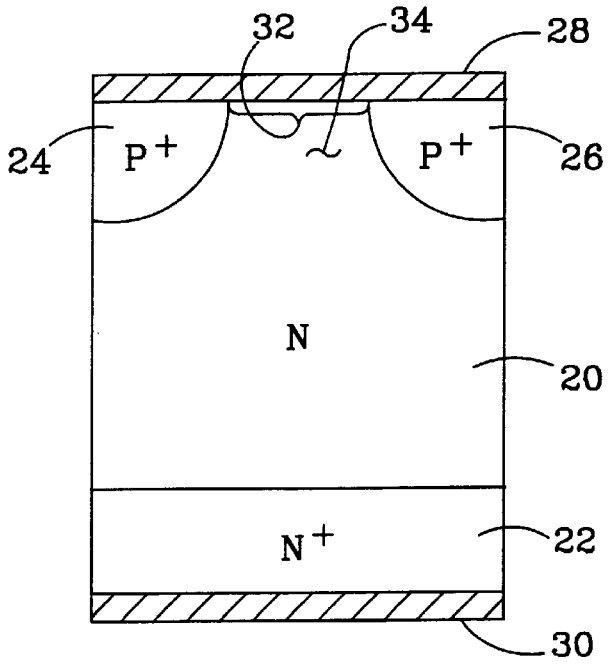

FIG.2
(Prior Art)