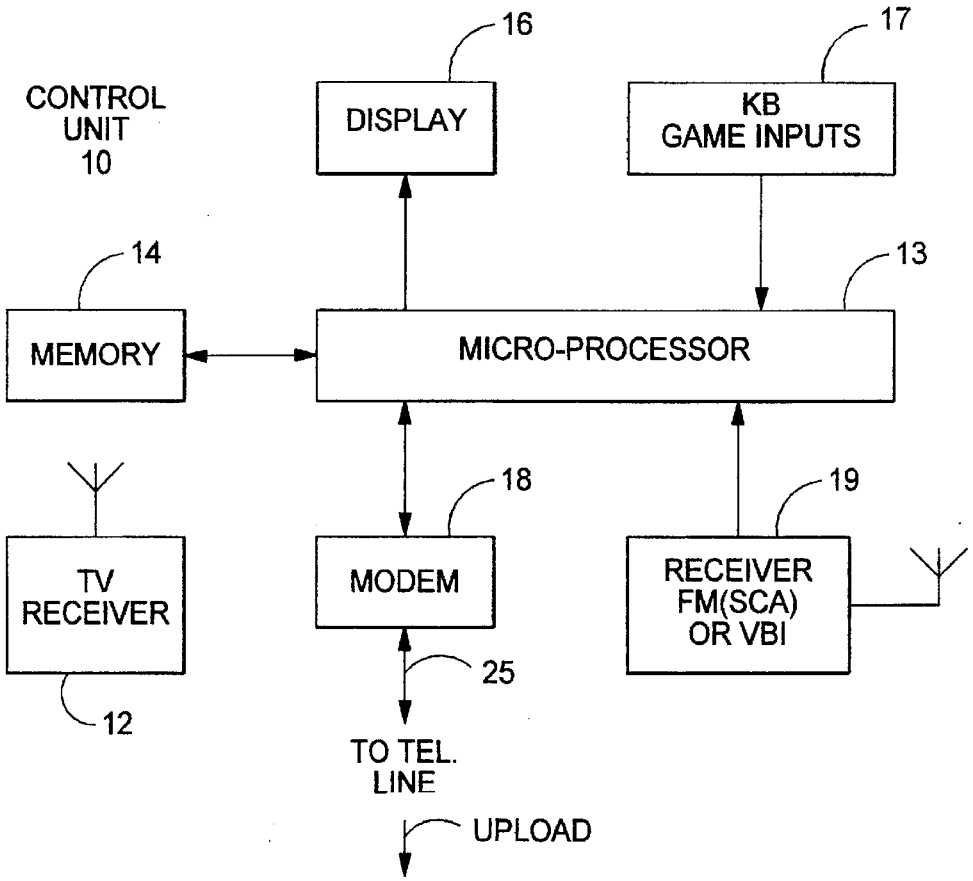
CONTROL UNIT 10
16
DISPLAY
17
KB GAME INPUTS
14
MEMORY
13
MICRO-PROCESSOR
18
MODEM
19
RECEIVER FM(SCA) OR VBI
TV RECEIVER
12
25
TO TEL. LINE
UPLOAD

FIG.1

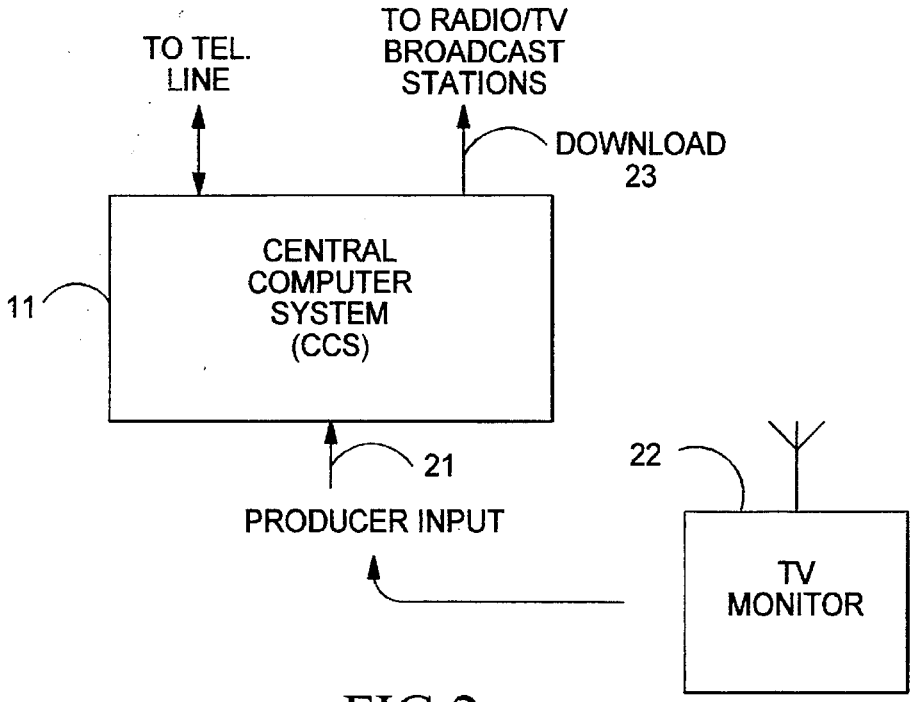
TO TEL. LINE
TO RADIO/TV BROADCAST STATIONS
DOWNLOAD 23
CENTRAL COMPUTER SYSTEM (CCS)
11
21
PRODUCER INPUT
22
TV MONITOR

FIG.2