US005842788A

United States Patent [19]

Danley et al.

[11] **Patent Number: 5,842,788**

[45] **Date of Patent: Dec. 1, 1998**

[54] **DIFFERENTIAL SCANNING CALORIMETER**

[75] Inventors: **Robert L. Danley**, Collingswood, N.J.; **John R. Reader, Jr.**, Newark; **John W. Schaefer**, Wilmington, both of Del.

[73] Assignee: **TA Instruments, Inc.**, New Castle, Del.

[21] Appl. No.: **962,378**

[22] Filed: **Oct. 31, 1997**

[51] **Int. Cl.**[6] **G01N 25/20**

[52] **U.S. Cl.** **374/12**; 374/10

[58] **Field of Search** 374/10, 11, 12, 374/29, 30

[56] **References Cited**

U.S. PATENT DOCUMENTS

4,102,199	7/1978	Tsipouras	374/167
4,255,961	3/1981	Biltonem et al.	374/11
4,350,446	9/1982	Johnson	374/13
4,590,669	5/1986	Imamura	374/208
4,783,174	11/1988	Gmelin et al.	374/11
4,812,051	3/1989	Paulik et al.	374/10
4,848,921	7/1989	Kunze	374/11
4,971,452	11/1990	Finney	374/208
5,013,159	5/1991	Nakamura et al.	374/12
5,211,477	5/1993	Li	374/10
5,224,775	7/1993	Reading et al.	374/11
5,599,104	2/1997	Nakamura et al.	374/12
5,672,289	9/1997	O'Neill	374/11

Primary Examiner—Diego F.F. Gutierrez
Attorney, Agent, or Firm—Crowell & Moring LLP

[57] **ABSTRACT**

A Differential Scanning Calorimeter (DSC) which has constant calorimetric sensitivity over its entire range of operating temperatures from −200° C. to 540° C. The DSC sensor consists of a pair of thin-film Resistance Temperature Detectors (RTDs) which are used to sense the temperature of a sample and the temperature difference between the sample and an inert reference. The RTDs are supplied with an excitation current which varies according to the temperature of the reference to achieve constant calorimetric sensitivity, independent of the operating temperature.
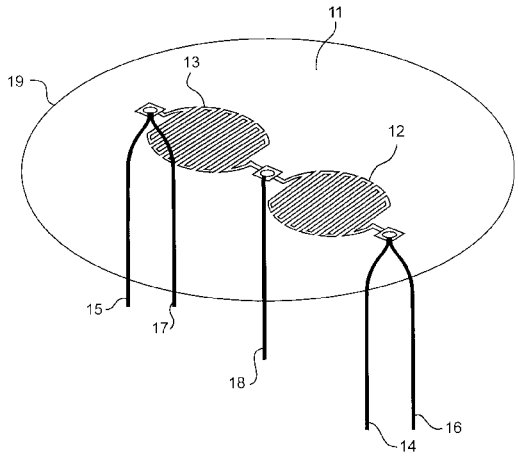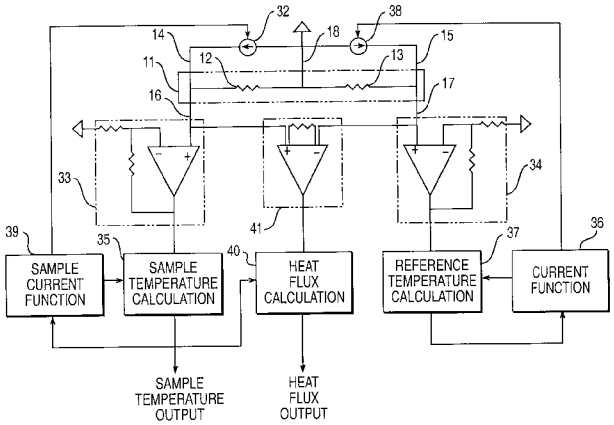
26 Claims, 4 Drawing Sheets