US009636888B2

(12) **United States Patent**
Roychoudhury

(10) **Patent No.: US 9,636,888 B2**
(45) **Date of Patent: May 2, 2017**

(54) **INJECTION MOLDING OF HOLLOW ARTICLES**

(71) Applicant: **FORD GLOBAL TECHNOLOGIES, LLC**, Dearborn, MI (US)

(72) Inventor: **Raj S. Roychoudhury**, Bloomfield Hills, MI (US)

(73) Assignee: **FORD GLOBAL TECHNOLOGIES, LLC**, Dearborn, MI (US)

(*) Notice: Subject to any disclaimer, the term of this patent is extended or adjusted under 35 U.S.C. 154(b) by 172 days.

(21) Appl. No.: **14/613,407**

(22) Filed: **Feb. 4, 2015**

(65) **Prior Publication Data**

US 2016/0221295 A1 Aug. 4, 2016

(51) **Int. Cl.**

B29C 45/16	(2006.01)
B32B 3/28	(2006.01)
B29L 31/30	(2006.01)
B29L 22/02	(2006.01)

(52) **U.S. Cl.**

CPC ***B32B 3/28*** (2013.01); ***B29C 45/1657*** (2013.01); ***B29C 45/1671*** (2013.01); *B29C 2045/1668* (2013.01); *B29L 2022/027* (2013.01); *B29L 2031/3041* (2013.01); *B32B 2605/003* (2013.01)

(58) **Field of Classification Search**

CPC B29C 2045/0063; B29C 2045/2683; B29C 45/12

See application file for complete search history.

(56) **References Cited**

U.S. PATENT DOCUMENTS

7,458,604	B2	12/2008	Hier et al.
8,205,909	B2	6/2012	Kalisz
8,388,020	B2	3/2013	Ciplijauskas et al.
8,414,024	B1	4/2013	Kalisz et al.
8,474,868	B2	7/2013	Kalisz et al.
8,491,008	B2	7/2013	Roychoudhury et al.
8,720,948	B2	5/2014	Raines et al.
2002/0002782	A1*	1/2002	Voss B29C 45/0062 38/77.8
2005/0052010	A1	3/2005	Best et al.
2005/0098996	A1	5/2005	Enders
2006/0066088	A1	3/2006	Hier et al.
2007/0108747	A1	5/2007	Roychoudhury et al.
2008/0150268	A1	6/2008	Best et al.
2009/0152848	A1	6/2009	Sadr et al.
2009/0250915	A1	10/2009	Best et al.
2009/0263533	A1	10/2009	Nishida
2011/0109064	A1	5/2011	Best et al.
2011/0115201	A1	5/2011	Best et al.
2011/0133435	A1	6/2011	Sadr et al.
2011/0198827	A1	8/2011	Roychoudhury

(Continued)

FOREIGN PATENT DOCUMENTS

DE 202014105283 * 12/2014

Primary Examiner — Jill Heitbrink

(74) *Attorney, Agent, or Firm* — Vichit Chea; MacMillan, Sobanski & Todd, LLC

(57) **ABSTRACT**

Described are joint designs, tooling, and molding methods for a hollow object, such as an automobile bolster. The methods and structures provide a process and system that facilitates mold alignment, part alignment, material strength, design adaptability, efficient processing, reduced labor, increased production rates, reduced energy consumption per part, aesthetically pleasing surfaces, and reduces or eliminates the need for welding.
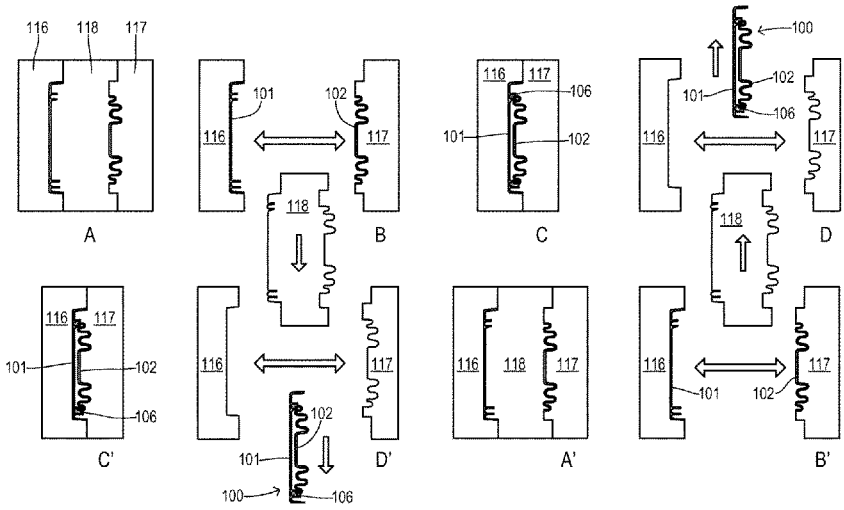
9 Claims, 7 Drawing Sheets