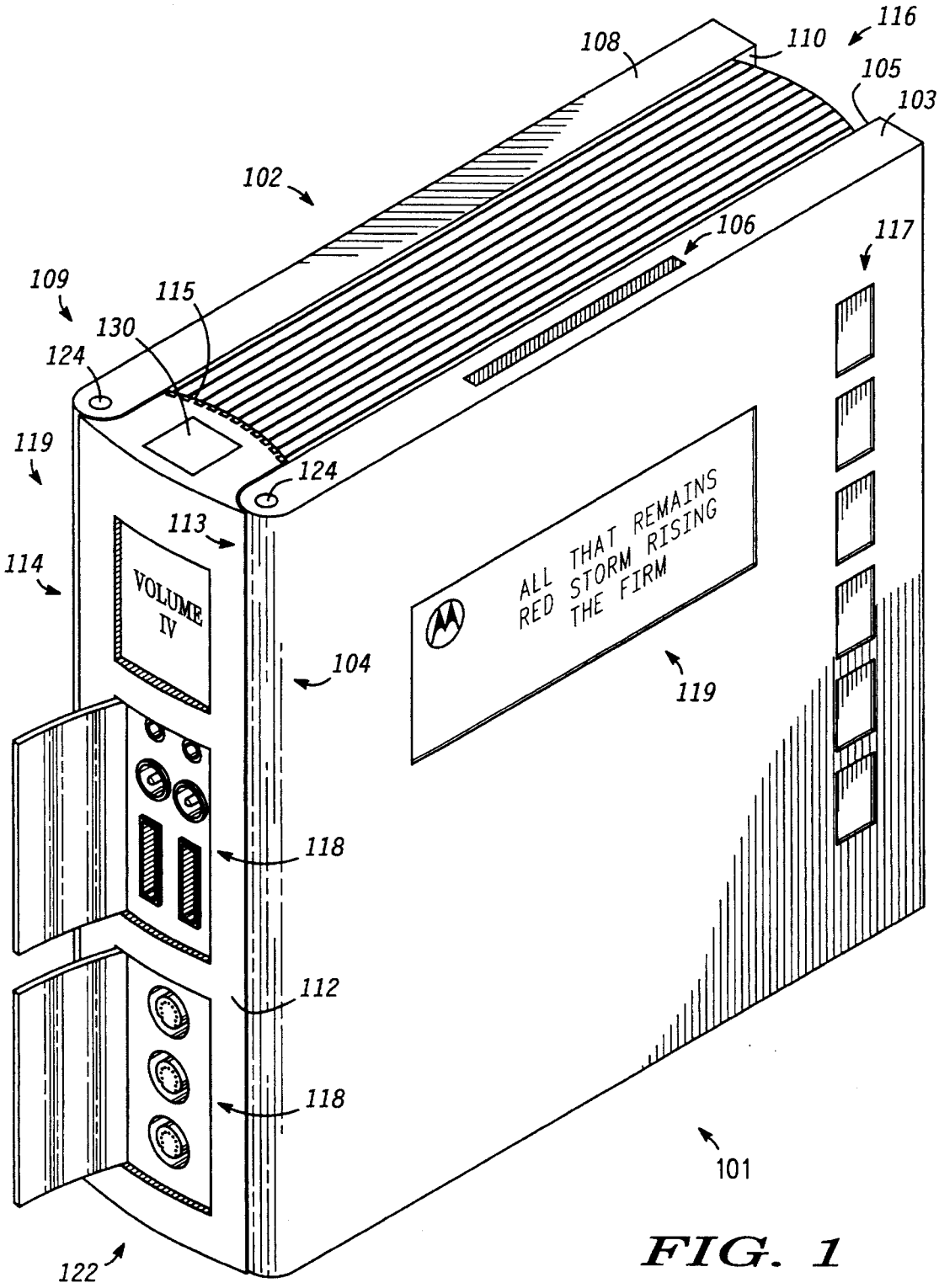
108
110
116
105
103
102
106
117
109
115
130
124
119
124
113
114
VOLUME IV
ALL THAT REMAINS
RED STORM RISING
THE FIRM
104
119
118
112
118
101
122

FIG. 1