US005534888A

United States Patent [19]

Lebby et al.

[11] **Patent Number: 5,534,888**

[45] **Date of Patent: Jul. 9, 1996**

[54] **ELECTRONIC BOOK**

[75] Inventors: **Michael S. Lebby**, Apache Junction, Ariz.; **Thomas H. Blair**, Schaumburg, Ill.; **Gary F. Witting**, Scottsdale, Ariz.

[73] Assignee: **Motorola**, Schaumburg, Ill.

[21] Appl. No.: **190,976**

[22] Filed: **Feb. 3, 1994**

[51] **Int. Cl.**[6] **G09G 1/00**; G06F 15/02

[52] **U.S. Cl.** **345/121**; 345/901; 361/681; 364/708.1

[58] **Field of Search** 345/87, 173, 50, 345/901, 121, 145, 800; 341/22; 340/825.44; 361/681, 685, 683, 684; 379/50; 395/145, 800; 434/169; 364/708; D14/106

[56] **References Cited**

U.S. PATENT DOCUMENTS

D. 338,455	8/1993	Suge	D14/106
4,159,417	6/1979	Rubincam	345/87
4,545,023	10/1985	Mizzi	345/173
4,855,725	8/1989	Fernandez	345/173
4,918,632	4/1990	York	364/708
4,939,514	7/1990	Miyazaki	341/22
4,948,232	8/1990	Lange	345/50
5,043,721	8/1991	May	340/825.44
5,109,354	4/1992	Yamashita et al.	361/681
5,128,981	7/1992	Tsukamoto et al.	379/58
5,199,104	3/1993	Hirayama	395/145
5,209,665	5/1993	Billings et al.	434/169
5,239,665	8/1993	Tsuchiya	395/800

FOREIGN PATENT DOCUMENTS

52-42328	4/1977	Japan .
62-44826	2/1987	Japan .

Primary Examiner—Steven Saras
Attorney, Agent, or Firm—Gary F. Witting; Eugene A. Parsons

[57] **ABSTRACT**

A multi-piece body (**102**) having a first hollow body (**103**) with a surface (**105**) and a second hollow body (**108**) with a surface (**110**) is provided. The first hollow body (**103**) and the second hollow body (**108**) is hingeably affixed such that the surface (**105**) of the first hollow body (**103**) and the surface (**110**) of the second hollow body (**108**) are capable of being closed on each other. A computer including a processor (**560**) for manipulating data, memory for data storage, an input for entering data, and an output for removing data is located in the multi-piece body (**102**). A plurality of optical displays (**116**) are operably coupled to the electronics **130**, thereby enabling data to be optically displayed with the plurality of page displays (**116**).
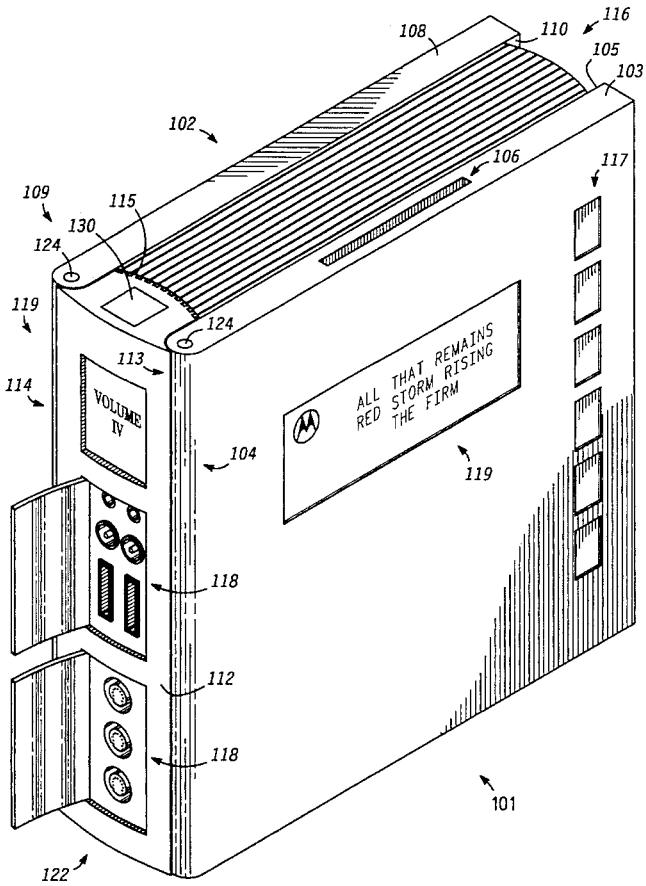
23 Claims, 3 Drawing Sheets