US006828588B2

(12) **United States Patent**
Sakurai et al.

(10) **Patent No.: US 6,828,588 B2**
(45) **Date of Patent: Dec. 7, 2004**

(54) **PROTECTIVE FILM FOR FPD, VAPOR DEPOSITION MATERIAL FOR PROTECTIVE FILM AND ITS PRODUCTION METHOD, FPD, AND MANUFACTURING DEVICE FOR FPD PROTECTIVE FILM**

(75) Inventors: **Hideaki Sakurai**, Saitama (JP); **Yoshirou Kuromitsu**, Saitama (JP)

(73) Assignee: **Mitsubishi Materials Corporation**, Tokyo (JP)

(*) Notice: Subject to any disclaimer, the term of this patent is extended or adjusted under 35 U.S.C. 154(b) by 0 days.

(21) Appl. No.: **09/901,908**

(22) Filed: **Jul. 11, 2001**

(65) **Prior Publication Data**

US 2002/0074623 A1 Jun. 20, 2002

(30) **Foreign Application Priority Data**

Jul. 12, 2000	(JP)	P2000-210667
Oct. 2, 2000	(JP)	P2000-302404
Jan. 25, 2001	(JP)	P2001-016910
May 31, 2001	(JP)	P2001-163910

(51) **Int. Cl.**[7] **H01L 27/15**
(52) **U.S. Cl.** **257/79**
(58) **Field of Search** 257/79, 632; 313/509; 445/24

(56) **References Cited**

U.S. PATENT DOCUMENTS

5,462,922 A	*	10/1995	Doi et al.	505/785
5,496,583 A	*	3/1996	Jansen et al.	427/109
5,891,531 A	*	4/1999	Konishi et al.	427/564

FOREIGN PATENT DOCUMENTS

JP	6-26206		4/1994	
JP	09-040881		2/1997	
JP	2741546		1/1998	
JP	10-101830		4/1998	
JP	41049767 A	*	6/1998	H01J/9/02
JP	10-182861		7/1998	
JP	10-204195		8/1998	
JP	10-512100		11/1998	
JP	2000-331601 A	*	11/2000	C23C/14/08
JP	2001-035382 A	*	2/2001	H01J/9/02
WO	WO 87/01508		3/1987	
WO	WO 96/19825		6/1996	

OTHER PUBLICATIONS

John L.. Vossen Thin Film processes Acedemic Press 1978 pp. 438–439.*

The Seventh Fine Process Technology Japan '97 Seminar Preliminary Report D5, (1997) pp. 1–16 (English Translation).

Monthly Semiconductor World, [3], (1988), p. 121, left col., line 8 to right col., second line from the bottom, p. 122, left col., lines 18–21, lines 31 and 32, lines 23–34 (partial English translation).

Excalibur Paper Phase Cleaning System Described in the Catalog of MFSI Co., Ltd., p. 2, lines 2 and 3 (partial English Translation).

(List continued on next page.)

Primary Examiner—David S. Blum
(74) *Attorney, Agent, or Firm*—Oblon, Spivak, McClelland, Maier & Neustadt, P.C.

(57) **ABSTRACT**

A vapor deposited material for FPD protective film comprises a polycrystalline body, sintered body, or single crystal having a surface covered with a fluoride layer. A manufacturing device for FPD protective film comprises: a film formation section for forming a film body on one side of a substrate, and a layer formation section for forming a fluoride layer on a surface of said film body; wherein said layer formation section comprises: a layer formation chamber for housing a substrate on which said film body is formed, a gas supply mechanism for forming a fluoride layer on the surface of said film body by supplying a fluoridation agent towards said substrate in said layer formation chamber, and a substrate heating section provided in said layer formation chamber for heating said substrate.
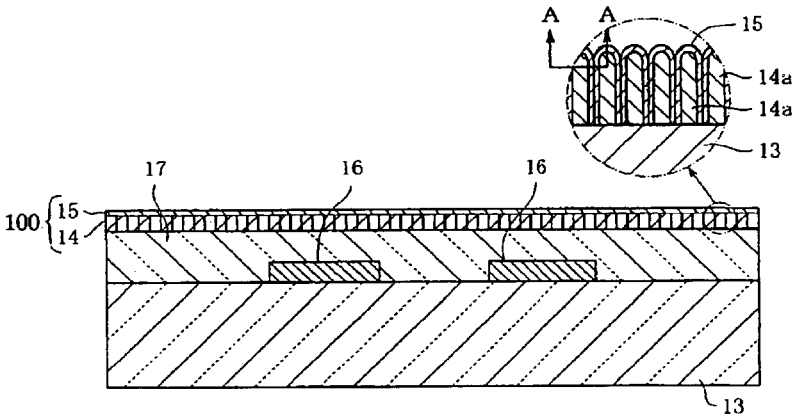
13 Claims, 8 Drawing Sheets