US005821688A

United States Patent [19]

Shanks et al.

[11] **Patent Number: 5,821,688**

[45] **Date of Patent: Oct. 13, 1998**

[54] **FLEXIBLE PANEL DISPLAY HAVING THIN FILM TRANSISTORS DRIVING POLYMER LIGHT-EMITTING DIODES**

[75] Inventors: **Howard R. Shanks**; **Stanley G. Burns**; **Frank R. Jeffrey, III**, all of Ames, Iowa

[73] Assignee: **Iowa State University Research Foundation**, Ames, Iowa

[21] Appl. No.: **970,684**

[22] Filed: **Nov. 14, 1997**

Related U.S. Application Data

[62] Division of Ser. No. 320,029, Oct. 7, 1994, Pat. No. 5,747, 928.

[51] **Int. Cl.**[6] **H05B 33/02**; H01L 29/04

[52] **U.S. Cl.** **313/498**; 313/499; 313/504; 313/506; 313/509; 345/76; 257/59; 257/72; 257/347

[58] **Field of Search** 313/498, 499, 313/504, 506, 509, 500, 501, 502, 505, 512; 345/76; 257/59, 72, 347

[56] **References Cited**

U.S. PATENT DOCUMENTS

4,707,692	11/1987	Hifggins et al.	345/76 X
4,864,182	9/1989	Fujioka et al.	345/76 X
5,041,884	8/1991	Kumamoto et al.	257/347
5,084,905	1/1992	Sasaki et al.	257/347
5,200,668	4/1993	Ohashi et al.	313/499 X
5,235,189	8/1993	Hayden et al.	257/347
5,274,602	12/1993	Glenn	365/239
5,276,380	1/1994	Tang	345/76 X
5,334,539	8/1994	Shinar et al.	345/76 X

OTHER PUBLICATIONS

"The Origin of Slow Rates States At the Interface of alpha–Si:H and Silicon Nitride", by R.A. Streets et al., Mat. Res. Soc. Symp. Proc. vol. 70, pp. 367–372, Dec. 1986.

"Properties of The Interface between Amorphous Siliconand Nitride", by Tsai et al., Mat. Res. Soc. Symp. Proc. vol. 70, pp. 351–359, Dec. 1986.

"Defect States In Silicon Nitride", by Robertson et al., Mat. Res. Soc. Symp. Proc. vol. 49, pp. 215–222, Dec. 1985.

Primary Examiner—Ashok Patel

Attorney, Agent, or Firm—Leydig, Voit & Mayer, Ltd.

[57] **ABSTRACT**

A non-planar electronic light-emitting display has a display area divided into a matrix of pixels. Each pixel includes two primary elements, an electronic driver and a light-emitting diode based on a light-emitting polymer. The electronic driver is a thin film transistor device of amorphous silicon formed on the insulating substrate. The diode has a first electrode connected to and driven by the electronic transistor, a layer of light-emitting polymer deposited on the electrode, and an overlying electrode normally biased on. Energization of the driver biases the diode to cause the polymer to emit light. Each pixel is configured with the two-component structure described above, and row and column lines to the matrix of pixels are decoded by the drivers to cause selective illumination of the pixels.
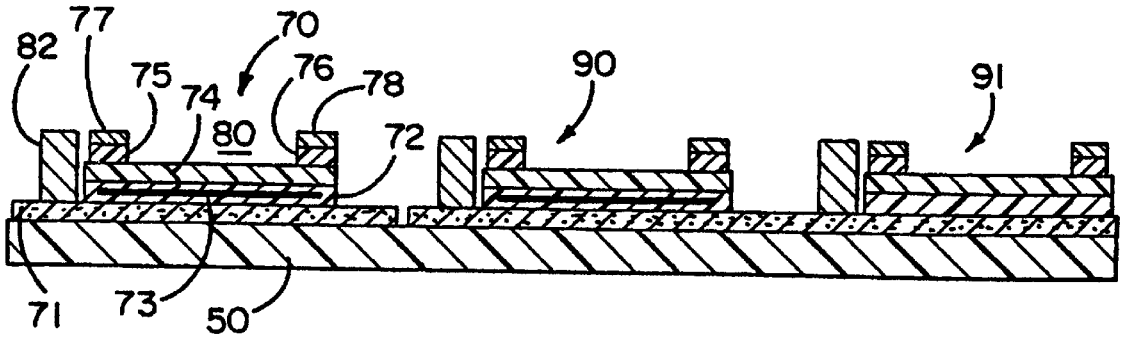
9 Claims, 2 Drawing Sheets