United States Patent [19]

Brodis et al.

[11] **4,312,688**

[45] **Jan. 26, 1982**

[54] **METHOD AND APPARATUS FOR MAKING SIMULATED STAINED-GLASS**

[76] Inventors: **Eric P. Brodis**, 508 Richmond Rd., East Meadow, N.Y. 11554; **Anthony Ricca**, 23 E. Webster St., Merrick, N.Y. 11566

[21] Appl. No.: **120,389**

[22] Filed: **Feb. 11, 1980**

[51] **Int. Cl.**[3] **B65D 69/00**; B44F 1/06; B44C 5/08

[52] **U.S. Cl.** **156/63**; 206/575; 428/38; 428/43; 428/220; 428/344; 428/379; 428/40

[58] **Field of Search** 35/26; 156/63; 206/575; 428/38, 43, 40, 344, 379, 220; 434/98

[56] **References Cited**

U.S. PATENT DOCUMENTS

3,382,134	5/1968	Powell	428/38
3,420,728	1/1969	Haverstock	156/63 X
3,713,958	1/1973	McCracken	156/63 X
3,815,263	6/1974	Oberwager	428/38 X
3,931,425	1/1976	Kuroda	428/38
3,947,992	4/1976	Lemelson	428/38 X
4,127,689	11/1978	Holt	428/38

FOREIGN PATENT DOCUMENTS

1331354	9/1973	United Kingdom	428/43

Primary Examiner—Robert A. Dawson
Attorney, Agent, or Firm—Howard Alan Taishoff

[57] **ABSTRACT**

A method and apparatus for making simulated stained-glass uses an existing surface. An outline of a given design is traced or drawn on the surface to be decorated. Pressure-sensitive lead stripping is applied to the surface in registration with the outline thereby delineating lead-stripped areas. The edges of the lead stripping are boned, sealing same to the surface. Colored, plastic, thin-film stock is cut so as to be complementary in size to a given lead-delineated area, and then applied thereto. The lead stripping resembles a frame that appears to hold the thin-film stock, and it, in conjunction with the translucence of the thin-film, produces an effect that closely resembles real stained-glass.
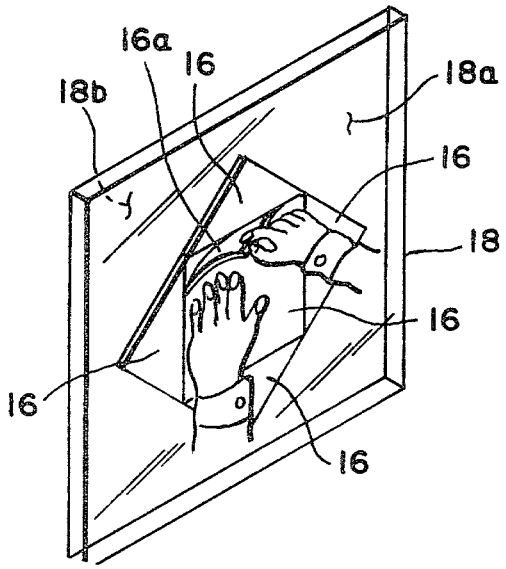
10 Claims, 13 Drawing Figures