US009411088B2

(12) **United States Patent**
Krijn et al.

(10) **Patent No.: US 9,411,088 B2**
(45) **Date of Patent: Aug. 9, 2016**

(54) **ILLUMINATION MODULE**

(75) Inventors: **Marcellinus Petrus Carolus Michael Krijn**, Eindhoven (NL); **Michel Cornelis Josephus Marie Vissenberg**, Eindhoven (NL); **Willem Lubertus Ijzerman**, Eindhoven (NL); **Hugo Johan Cornelissen**, Eindhoven (NL); **Ramon Pascal Van Gorkom**, Eindhoven (NL)

(73) Assignee: **KONINKLIJKE PHILIPS N.V.**, Eindhoven (NL)

(*) Notice: Subject to any disclaimer, the term of this patent is extended or adjusted under 35 U.S.C. 154(b) by 2202 days.

(21) Appl. No.: **12/064,636**

(22) PCT Filed: **Aug. 15, 2006**

(86) PCT No.: **PCT/IB2006/052808**

§ 371 (c)(1),
(2), (4) Date: **Feb. 25, 2008**

(87) PCT Pub. No.: **WO2007/023415**

PCT Pub. Date: **Mar. 1, 2007**

(65) **Prior Publication Data**

US 2008/0186273 A1 Aug. 7, 2008

(30) **Foreign Application Priority Data**

Aug. 24, 2005 (EP) 05107749

(51) **Int. Cl.**

G02B 6/43	(2006.01)
G02F 1/13357	(2006.01)
F21V 8/00	(2006.01)
G02F 1/1335	(2006.01)

(52) **U.S. Cl.**

CPC ***G02B 6/0021*** (2013.01); ***G02B 6/0038*** (2013.01); ***G02F 1/133609*** (2013.01); *G02B 6/0036* (2013.01); *G02F 1/133603* (2013.01); *G02F 2001/133607* (2013.01)

(58) **Field of Classification Search**

CPC .. G02B 6/0021; G02B 6/0038; G02B 6/0033; G02B 6/0035; G02B 6/0036; F21V 7/0083; F21V 7/0091; F21V 5/007; G02F 1/33603; G02F 1/133606; G02F 1/133609; G02F 2001/133607; G02F 6/0038

USPC 362/97.1, 97.2, 97.3, 611, 612, 613, 362/617

See application file for complete search history.

(56) **References Cited**

U.S. PATENT DOCUMENTS

6,598,987	B1	7/2003	Parikka
6,647,199	B1	11/2003	Pelka et al.

(Continued)

FOREIGN PATENT DOCUMENTS

DE	29805006	U1	7/1998
JP	9026761	A	1/1997
JP	09320320	A	12/1997
JP	10082915	A	3/1998
JP	10082916	A	3/1998

(Continued)

Primary Examiner — Alan Cariaso
(74) *Attorney, Agent, or Firm* — Meenakshy Chakravorty

(57) **ABSTRACT**

The invention relates to an illumination module (**1**) comprising a plurality of light sources (**2**) distributed over a light guiding plate (**3**) accommodating said light sources and capable of guiding light of said light sources through at least a portion of said plate. The light guiding plate has one or more out-coupling structures (**4**), preferably arranged around each light source, so that at least a portion of the light emitted by a first light source (**2**A) and at least a portion of the light emitted by a second adjacent light source (**2**B) mix within said light guiding plate before leaving said illumination module as a single substantially collimated mixed light beam. The invention further relates to a lamp and a display apparatus comprising such an illumination module.
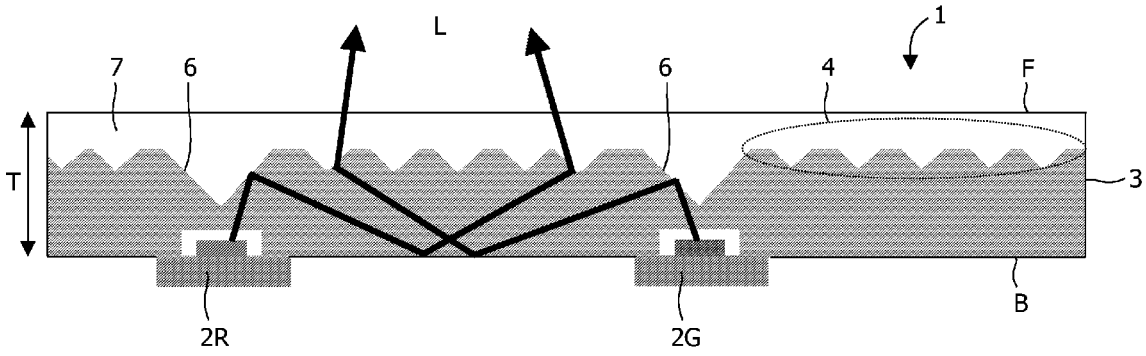
15 Claims, 11 Drawing Sheets