US009510588B2

(12) **United States Patent**
Werth

(10) **Patent No.: US 9,510,588 B2**
(45) **Date of Patent: Dec. 6, 2016**

(54) **GAME CALL**

(71) Applicant: **John C. Werth**, Knob Noster, MO (US)

(72) Inventor: **John C. Werth**, Knob Noster, MO (US)

(*) Notice: Subject to any disclaimer, the term of this patent is extended or adjusted under 35 U.S.C. 154(b) by 0 days.

(21) Appl. No.: **14/692,376**

(22) Filed: **Apr. 21, 2015**

(65) **Prior Publication Data**

US 2016/0174540 A1 Jun. 23, 2016

Related U.S. Application Data

(60) Provisional application No. 62/096,151, filed on Dec. 23, 2014.

(51) **Int. Cl.**

A63H 5/00	(2006.01)
A01M 31/00	(2006.01)
G10K 5/00	(2006.01)

(52) **U.S. Cl.**

CPC ***A01M 31/004*** (2013.01); ***G10K 5/00*** (2013.01)

(58) **Field of Classification Search**

CPC A01M 31/004; A63B 2071/0625
USPC 446/201–209
See application file for complete search history.

(56) **References Cited**

U.S. PATENT DOCUMENTS

4,940,451	A	7/1990	Leady	
6,152,798	A	11/2000	Raburn	
6,234,859	B1	5/2001	Primos et al.	
6,234,860	B1	5/2001	Cook	
6,435,933	B1	8/2002	Browne	
7,011,564	B2 *	3/2006	Ady	A01M 31/004 446/207
7,384,323	B2	6/2008	Sceery	
7,465,216	B2 *	12/2008	Iwasaki	B24B 37/04 451/446
7,637,795	B1 *	12/2009	Dukart	A01M 31/004 446/207
7,658,660	B1	2/2010	Drury	
8,016,637	B2 *	9/2011	Pribbanow	A01M 31/004 446/202
2003/0082988	A1 *	5/2003	Gendron	A01M 31/004 446/207

* cited by examiner

Primary Examiner — Nini Legesse
(74) *Attorney, Agent, or Firm* — Young Basile Hanlon & MacFarlane, P.C.

(57) **ABSTRACT**

An air operated game call includes a tone board, a reed and a tubular housing having an interior surface. The interior surface defines an air channel sized for housing the tone board and the reed, and includes at least one portion with transversely extending corrugations.
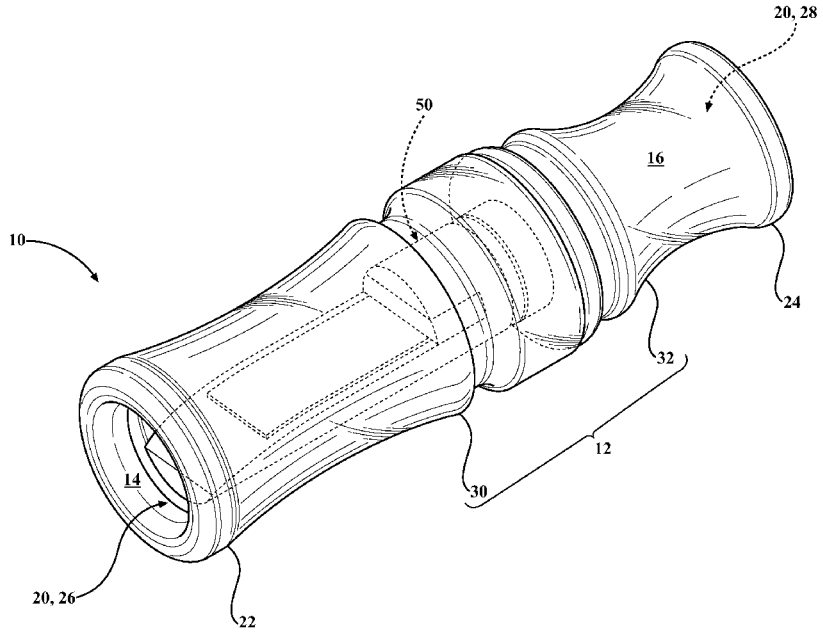
13 Claims, 8 Drawing Sheets