US008603288B2

(12) **United States Patent**
Sampica et al.

(10) **Patent No.: US 8,603,288 B2**
(45) **Date of Patent: Dec. 10, 2013**

(54) **PLANARIZATION TREATMENT OF PRESSURE SENSITIVE ADHESIVE FOR RIGID-TO-RIGID SUBSTRATE LAMINATION**

(75) Inventors: **James D. Sampica**, Springville, IA (US); **Paul R. Nemeth**, Cedar Rapids, IA (US); **Tracy J. Barnidge**, Marion, IA (US); **Vincent P. Marzen**, Robins, IA (US)

(73) Assignee: **Rockwell Collins, Inc.**, Cedar Rapids, IA (US)

(*) Notice: Subject to any disclaimer, the term of this patent is extended or adjusted under 35 U.S.C. 154(b) by 755 days.

(21) Appl. No.: **12/009,472**

(22) Filed: **Jan. 18, 2008**

(65) **Prior Publication Data**

US 2009/0186218 A1 Jul. 23, 2009

(51) **Int. Cl.**
B32B 37/10 (2006.01)

(52) **U.S. Cl.**
USPC **156/285**; 156/286

(58) **Field of Classification Search**
USPC 156/285, 286, 381, 382, 583.3; 349/187; 269/287, 288; 100/269.01–269.04; 425/389
See application file for complete search history.

(56) **References Cited**

U.S. PATENT DOCUMENTS

3,089,801	A	5/1963	Tierney et al.	
3,616,197	A	10/1971	Amberg et al.	
3,851,758	A *	12/1974	Makhijani et al.	206/710
4,078,962	A	3/1978	Krueger	
4,188,254	A	2/1980	Hemperly, Jr.	
4,235,951	A	11/1980	Swarovski	
4,737,182	A	4/1988	Fecik et al.	
4,747,577	A	5/1988	Dimock	
4,756,735	A	7/1988	Cathers et al.	
5,108,532	A	4/1992	Thein et al.	
5,566,840	A	10/1996	Waldner et al.	
5,592,288	A	1/1997	Sampica et al.	
5,678,303	A	10/1997	Wichmann	
5,918,517	A	7/1999	Malapert et al.	
5,950,512	A	9/1999	Fields	
5,959,762	A	9/1999	Bandettini et al.	
6,128,066	A *	10/2000	Yokozeki	349/187

(Continued)

FOREIGN PATENT DOCUMENTS

EP	0556351 B1	8/1993
EP	0711103 B1	5/1996

(Continued)

OTHER PUBLICATIONS

U.S. Appl. No. 12/009,482, filed Jan. 18, 2008, Barnidge et al.

(Continued)

Primary Examiner — Christopher Schatz
(74) *Attorney, Agent, or Firm* — Donna P. Suchy; Daniel M. Barbieri

(57) **ABSTRACT**

The present invention is a process for performing a planarization treatment of pressure-sensitive adhesive (PSA). The process includes positioning a first substrate onto a support surface of a planarization tool. The process further includes placing at least one layer of PSA onto the first substrate. The process further includes positioning a second substrate onto the layer(s) of PSA. The process further includes applying a pressure to the second substrate via a flexible membrane, said pressure being applied in a generally uniform, unidirectional and localized manner. Further, the applied pressure flattens the PSA between the first substrate and the second substrate for promoting suitability of the PSA for use in rigid-to-rigid lamination processes.
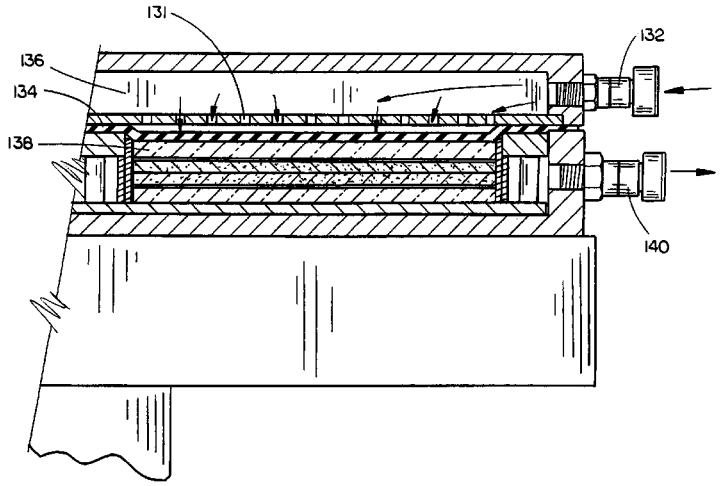
9 Claims, 8 Drawing Sheets