March 3, 1970 S. FRIEDBERG 3,498,587

COLLAPSIBLE PROTECTIVE ENCLOSURE

Filed Sept. 9, 1968 2 Sheets-Sheet 1

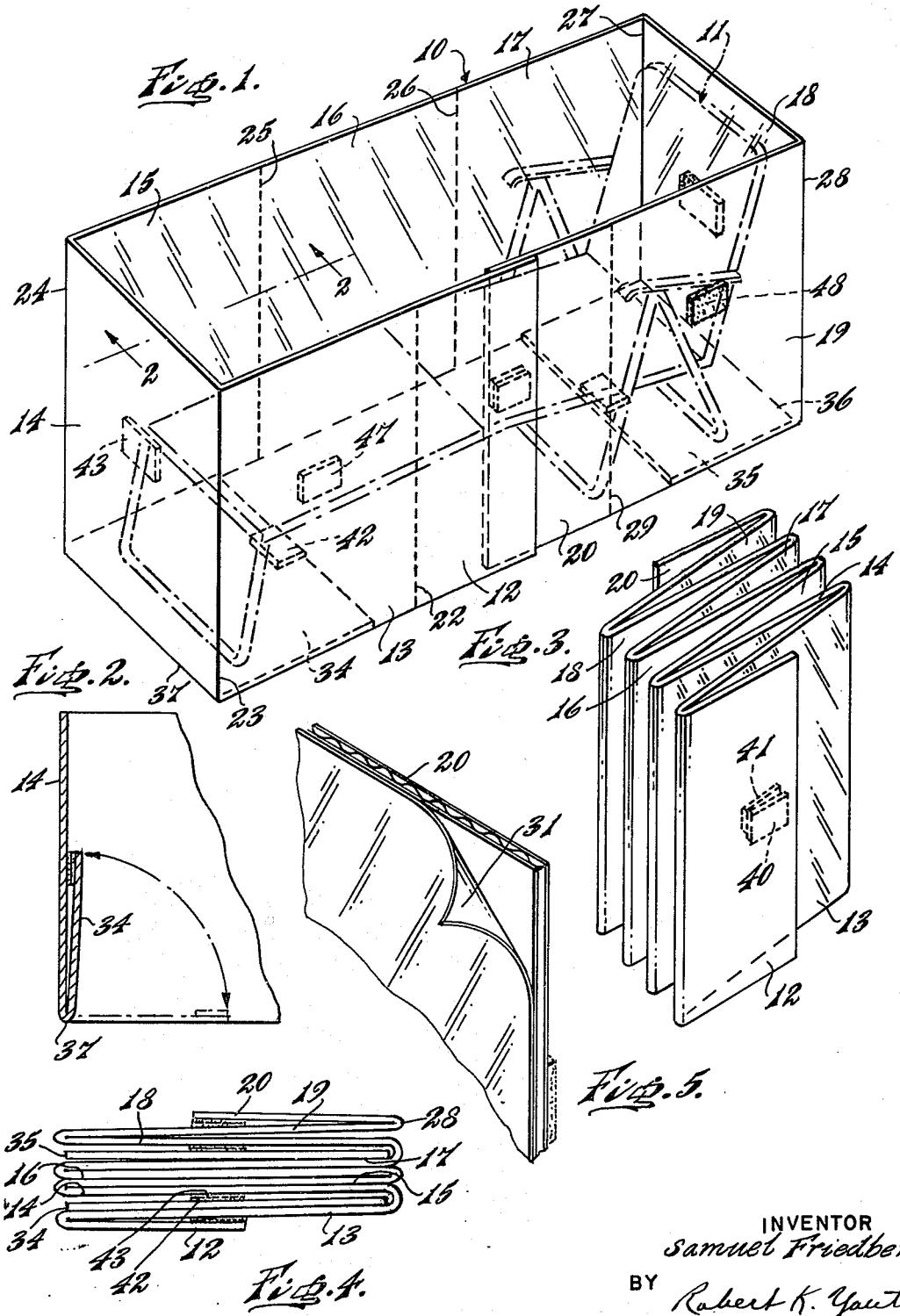

INVENTOR
Samuel Friedberg
BY Robert K. Yautie
ATTORNEY