US005598487A

United States Patent [19]

Hacker et al.

[11] **Patent Number: 5,598,487**

[45] **Date of Patent: *Jan. 28, 1997**

[54] **HAND-HELD DATA ENTRY SYSTEM REMOVABLE SIGNATURE PAD**

[75] Inventors: **David C. Hacker**, Jacksonville, Fla.; **Jerry L. Walter**, Cedar Rapids, Iowa; **Arvin D. Danielson**, Solon, Iowa; **Dennis A. Durbin**, Cedar Rapids, Iowa

[73] Assignee: **Norand Corporation**, Cedar Rapids, Iowa

[*] Notice: The term of this patent shall not extend beyond the expiration date of Pat. No. 5,123,064.

[21] Appl. No.: **306,073**

[22] Filed: **Sep. 14, 1994**

Related U.S. Application Data

[63] Continuation of Ser. No. 275,096, Jul. 14, 1994, abandoned, which is a continuation of Ser. No. 852,480, Mar. 17, 1992, abandoned, which is a continuation-in-part of Ser. No. 415,169, Sep. 29, 1989, Pat. No. 5,123,064, said Ser. No. 852,480, is a continuation-in-part of Ser. No. 451,322, Dec. 15, 1989, Pat. No. 5,227,614, which is a continuation-in-part of Ser. No. 143,921, Jan. 14, 1988, abandoned, which is a continuation-in-part of Ser. No. 897,547, Aug. 15, 1986, abandoned.

[51] **Int. Cl.**[6] **G06K 9/22**; G06F 3/00; G08C 21/00; G09G 5/00

[52] **U.S. Cl.** **382/313**; 364/709.11; 178/18; 345/169

[58] **Field of Search** 382/313, 314, 382/315; 178/18, 19, 20; 364/708, 708.1, 709.01, 709.04, 709.1, 709.11, 709.08; 345/156, 169, 173, 179, 901, 905

[56] **References Cited**

U.S. PATENT DOCUMENTS

4,005,400	1/1977	Engdahl	382/59
4,158,194	6/1979	McWaters et al.	382/59
4,718,103	1/1988	Shojima et al.	382/13
4,752,965	6/1988	Dunkley et al.	382/3
4,866,646	9/1989	Nakamura et al.	364/709.11
5,012,349	4/1991	de Fay	358/296
5,049,862	9/1991	Dao et al.	340/706
5,123,064	6/1992	Hacker et al.	382/59
5,194,852	3/1993	More et al.	340/712
5,227,614	7/1993	Danielson et al.	235/380

Primary Examiner—Leo Boudreau
Assistant Examiner—Matthew C. Bella
Attorney, Agent, or Firm—Suiter & Associates

[57] **ABSTRACT**

A data capturing module combined with a portable data terminal of the hand-held type to record handwritten data. Using a digitized pad, the module can provide for direct input of handwritten data into the system, or a peripheral digital scanner can be employed to provide for data entry. Depending upon the particular application, the module therefore provides for data entry of handwritten text or graphics using the data terminal and other components of a portable data system to enter, display, print or otherwise communicate the handwritten data.
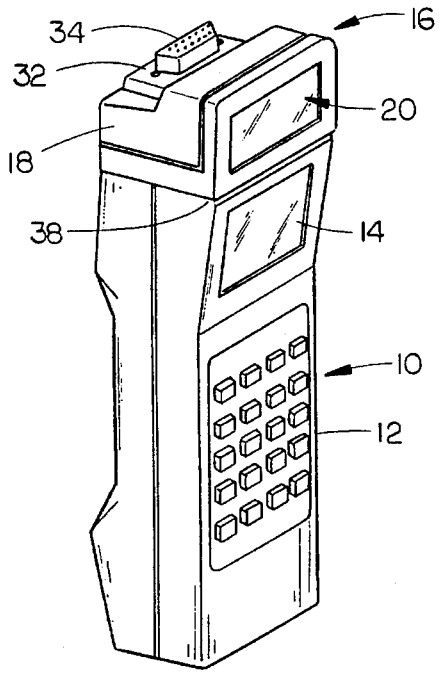
13 Claims, 10 Drawing Sheets