ISOLATION APPARATUS

Filed March 27, 1967 3 Sheets-Sheet 2

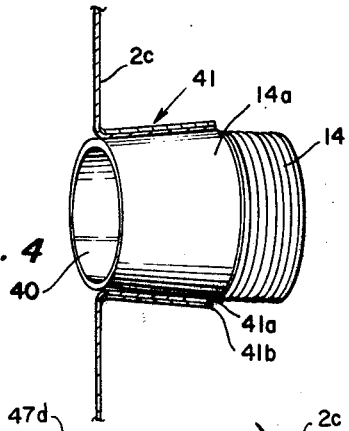

FIG. 4

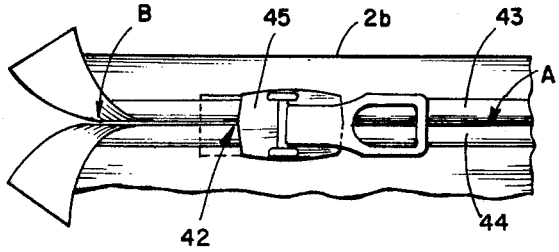

FIG. 5

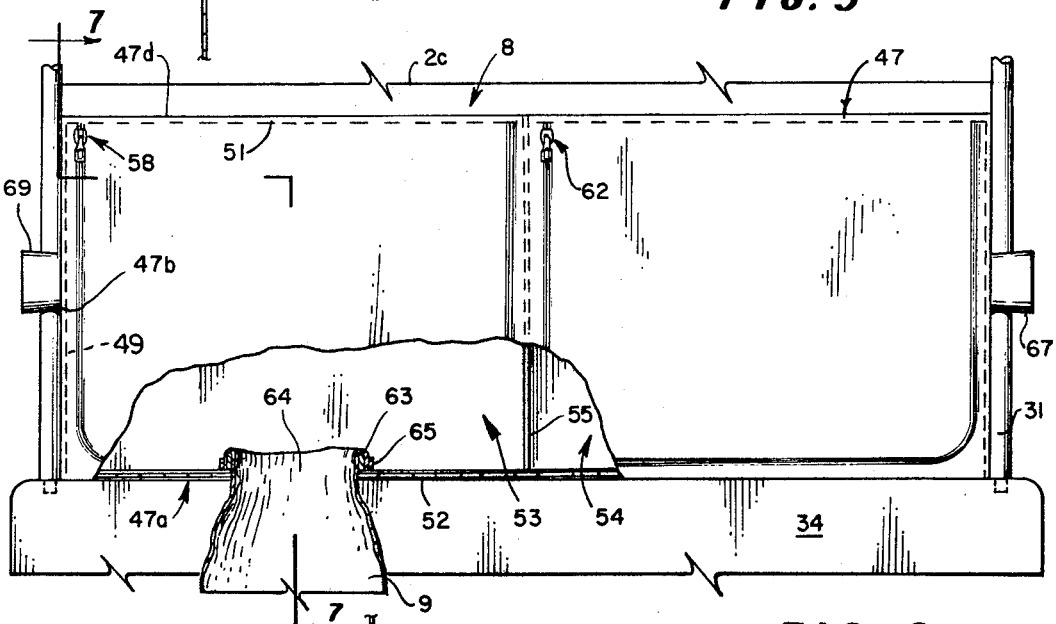

FIG. 6

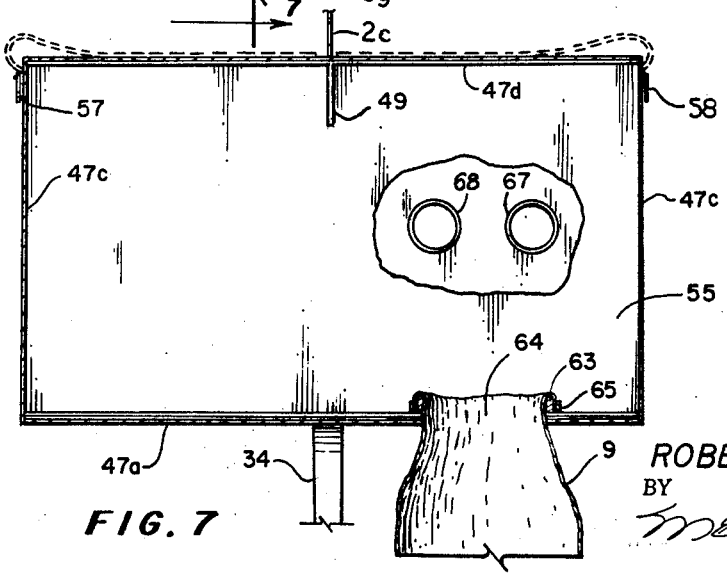

FIG. 7

INVENTOR.
ROBERT W. PARKER
BY
McGrew and Edwards
ATTORNEYS