Feb. 3, 1970 R. W. PARKER 3,492,987

ISOLATION APPARATUS

Filed March 27, 1967 3 Sheets-Sheet 1

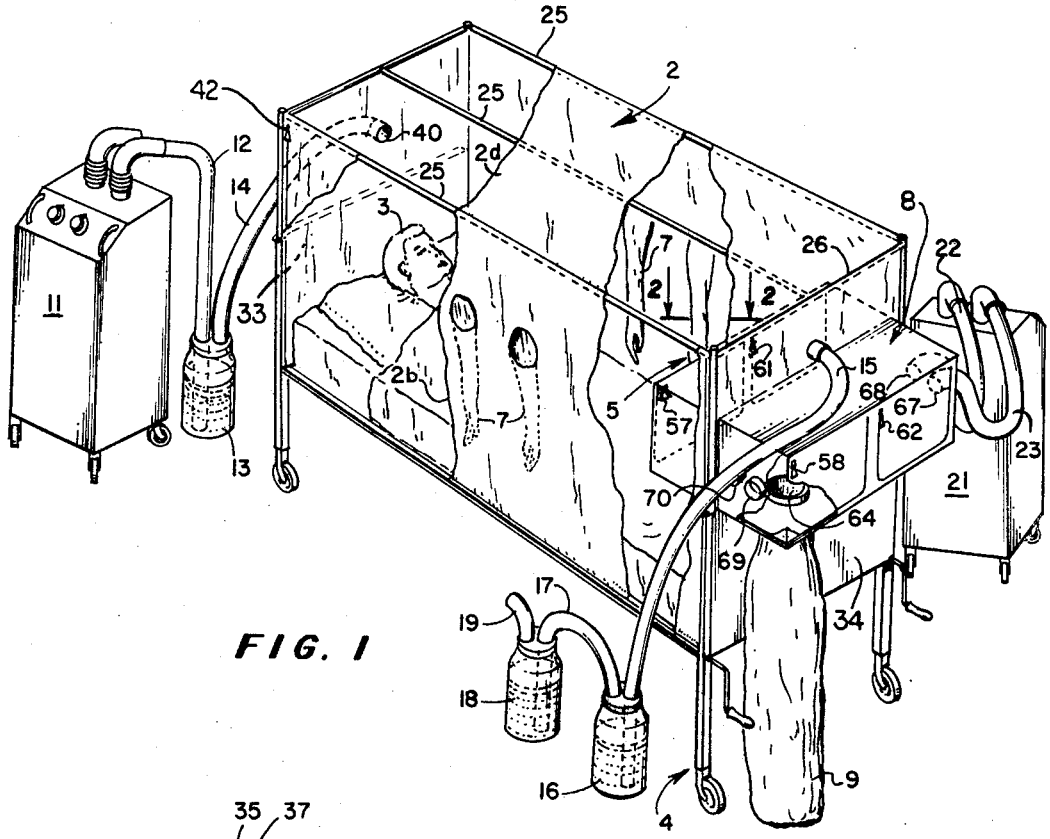

FIG. 1

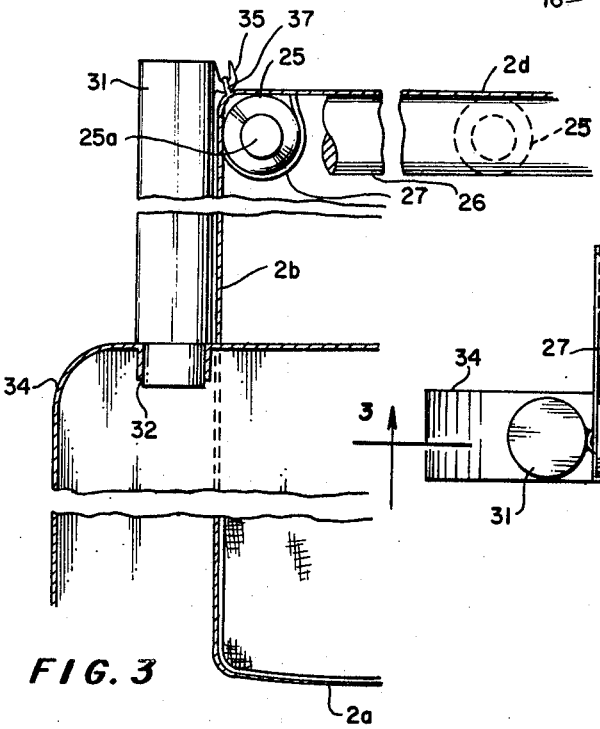

FIG. 3

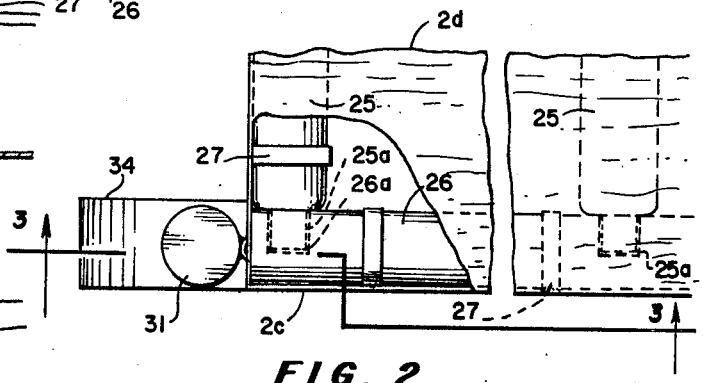

FIG. 2

INVENTOR.
ROBERT W. PARKER
BY
McGrew and Edwards
ATTORNEYS