Dec. 13, 1966 C. L. JAMES ETAL 3,290,987

AUTOMATIC SEARCHING FILM READER

Filed Jan. 16, 1964

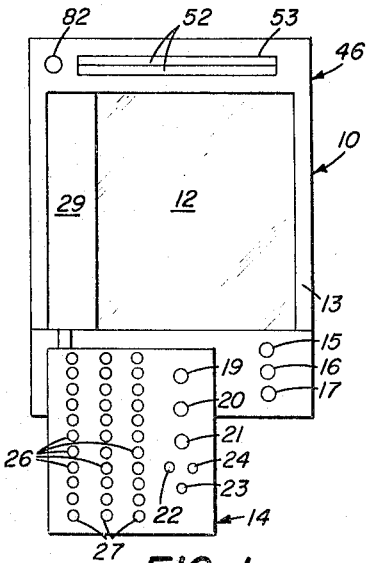

FIG. 1

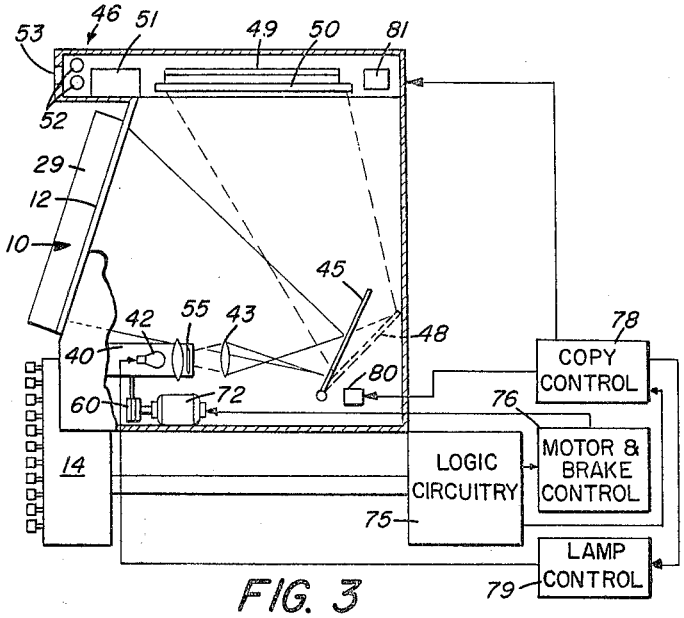

FIG. 3

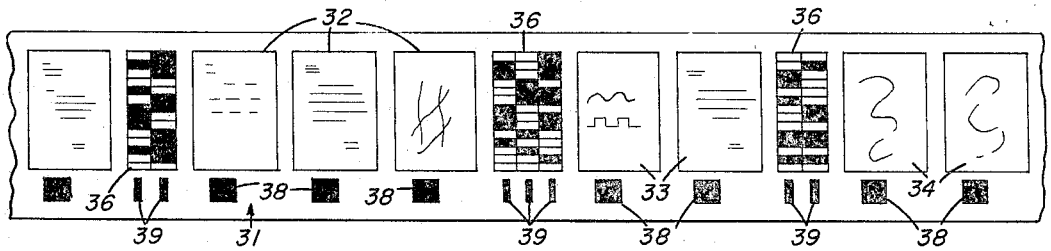

FIG. 2

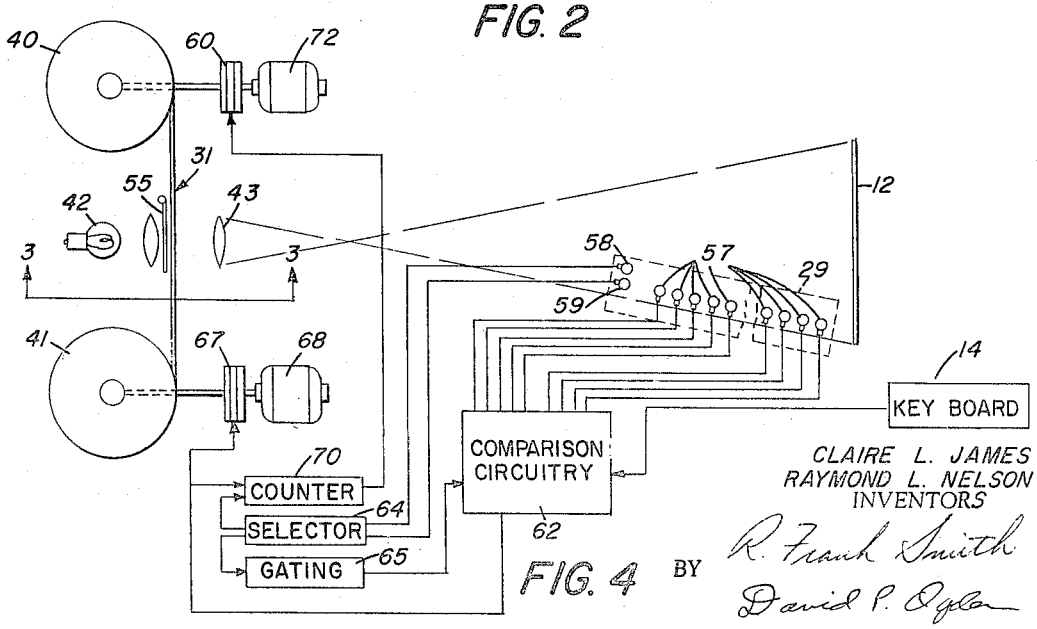

FIG. 4

CLAIRE L. JAMES
RAYMOND L. NELSON
INVENTORS

BY R. Frank Smith
David P. Ogden

ATTORNEYS