July 7, 1942. H. D. ALLEN 2,288,987

TAPING TOOL

Filed Nov. 1, 1941 2 Sheets-Sheet 1

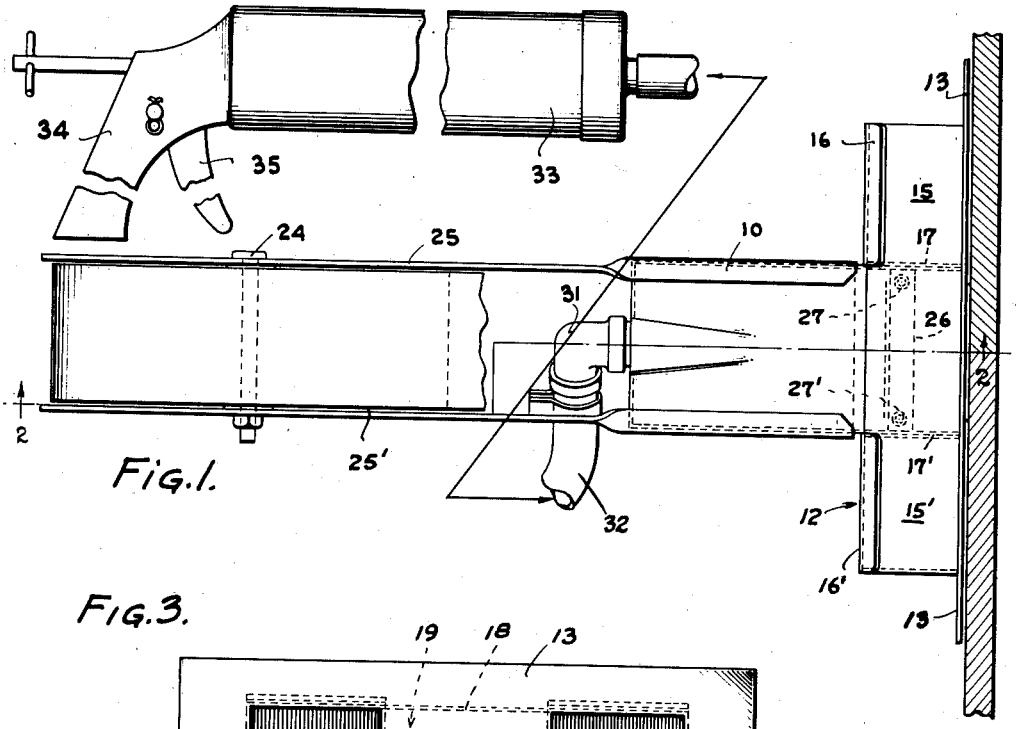

FIG. 1.

FIG. 3.

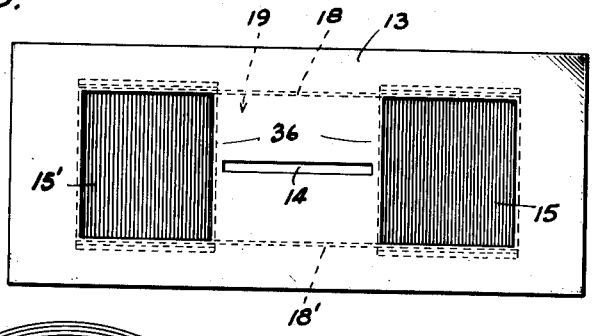

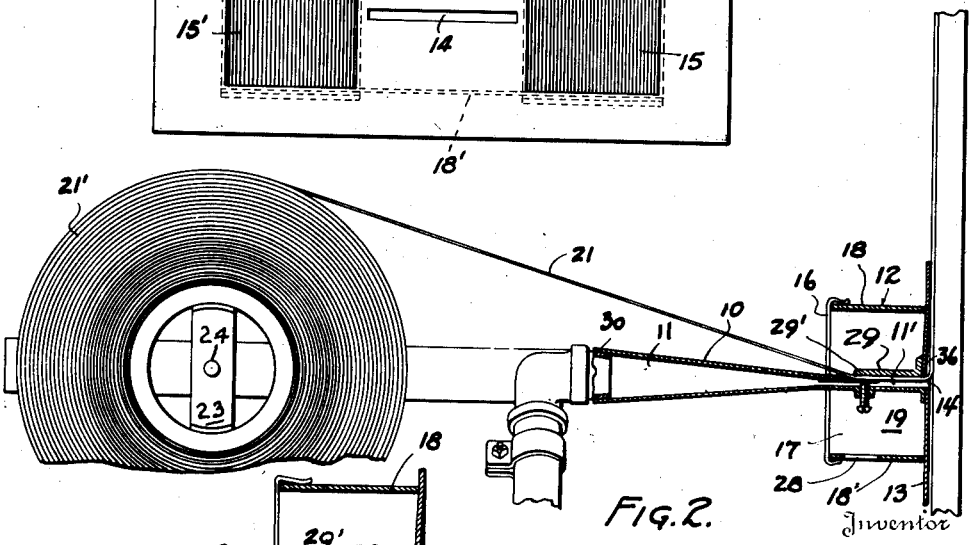

FIG. 2.

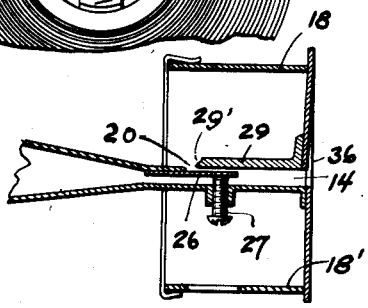

FIG. 4.

Inventor

H. D. Allen

By

A. Yates Dowell

Attorney