2 Sheets—Sheet 1.

A. G. BELL.

ELECTRIC TELEGRAPHY.

Patented Jan. 30, 1877.

No. 186,787.

Fig. 1.

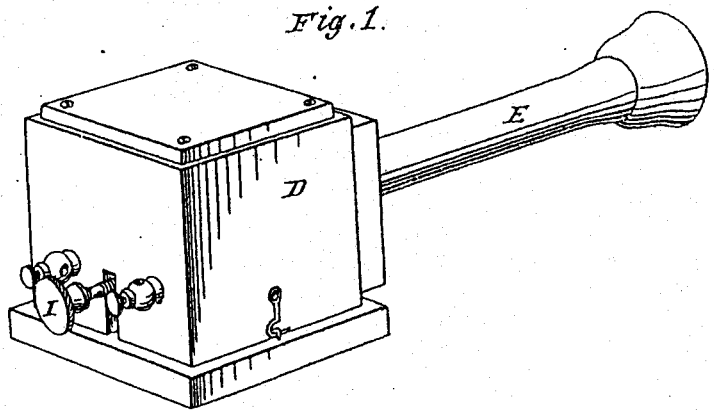

Fig. 2.

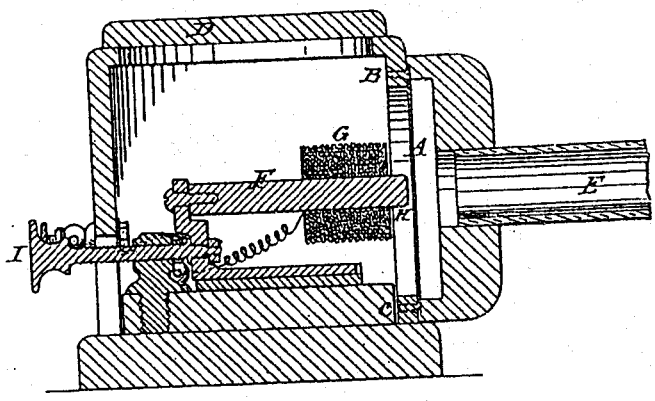

Fig. 3.

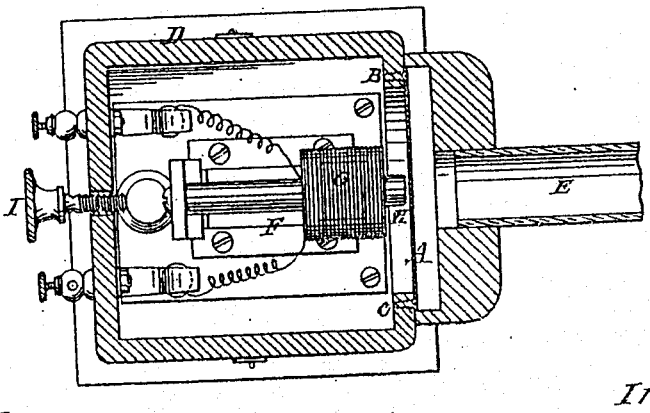

Attest

A. Pollok

Avell A. Sick

Inventor:

Alexander Graham Bell

PATENS, PHOTO-LITHOGRAPHER, WASHINGTON, D