Dec. 30, 1969 J. S. GUILLON 3,486,287

WALL ASSEMBLING DEVICE

Filed April 30, 1968 2 Sheets-Sheet 1

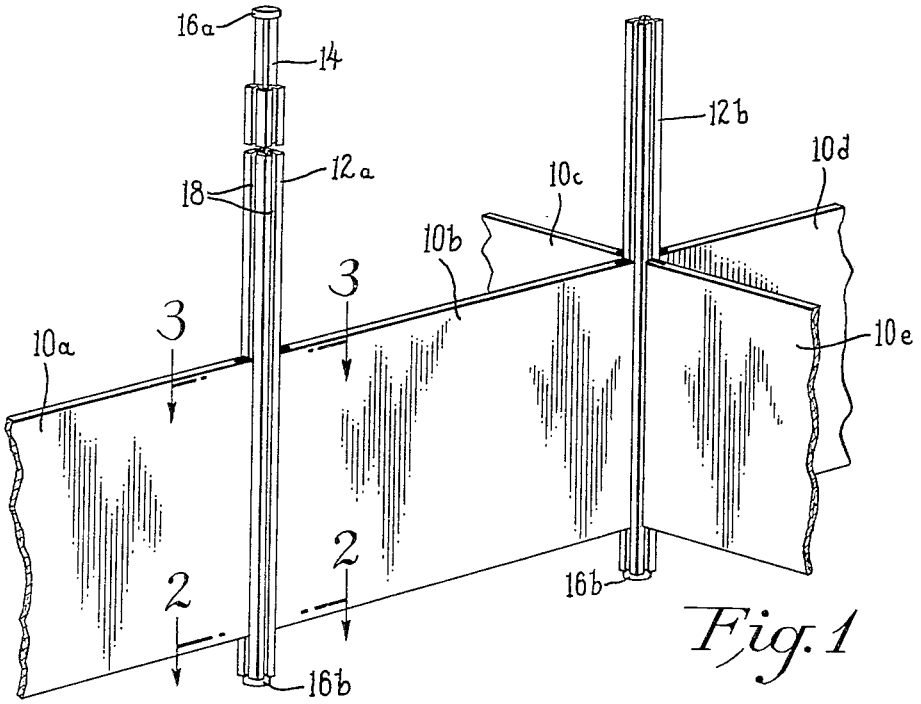


Fig. 1

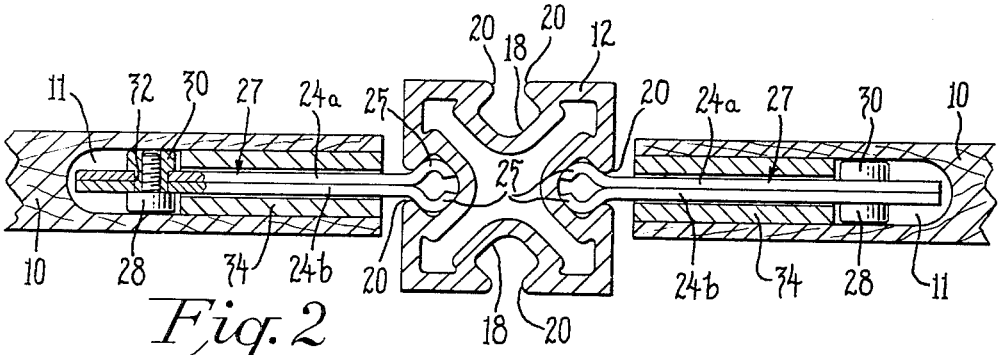


Fig. 2

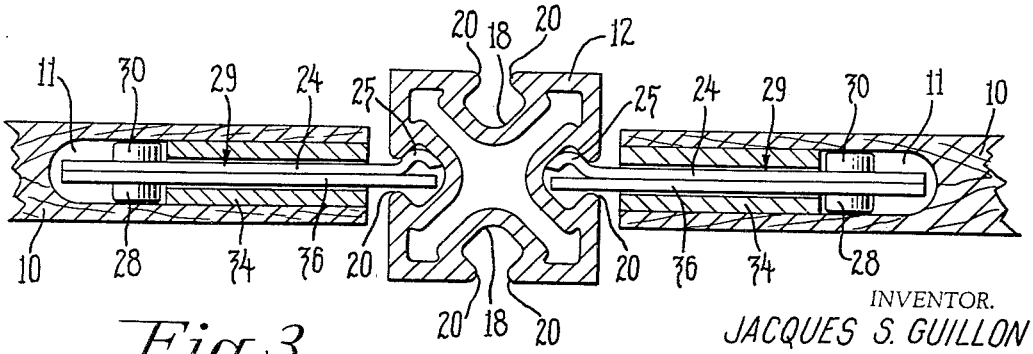


Fig. 3

INVENTOR.
JACQUES S. GUILLON
BY
Tweedale & Gerhardt
ATTORNEYS.