US005674287A

United States Patent [19]

Slepian et al.

[11] Patent Number: 5,674,287

[45] Date of Patent: Oct. 7, 1997

[54] **BIODEGRADABLE POLYMERIC ENDOLUMINAL SEALING PROCESS, APPARATUS AND POLYMERIC PRODUCT FOR USE THEREIN**

[75] Inventors: **Marvin J. Slepian**, Cleveland Heights, Ohio; **Anton Schindler**, Durham, N.C.

[73] Assignee: **Endoluminal Therapeutics, Inc.**, Tucson, Ariz.

[21] Appl. No.: **182,516**

[22] Filed: **Jan. 14, 1994**

Related U.S. Application Data

[63] Continuation of Ser. No. 651,346, filed as PCT/US89/03593, Feb. 23, 1989, abandoned, which is a continuation-in-part of Ser. No. 593,302, Oct. 3, 1990, abandoned, and Ser. No. 235,998, Aug. 24, 1988, abandoned.

[51] **Int. Cl.**[6] **A61F 2/04**; A61F 2/06

[52] **U.S. Cl.** **623/11**; 623/12; 623/66; 623/1

[58] **Field of Search** 623/1, 66, 12, 623/11, 13; 600/36; 604/36, 48, 52, 82, 83, 96; 424/422, 423; 606/194, 195

[56] **References Cited**

U.S. PATENT DOCUMENTS

2,642,874	6/1953	Keeling .	
2,854,982	10/1958	Pagano .	
3,221,745	12/1965	Coover et al. .	
3,620,218	11/1971	Schmitt et al. .	
3,640,741	2/1972	Etes .	
3,707,146	12/1972	Cook et al.	604/96
3,711,777	1/1973	Horzewski et al. .	
3,868,956	3/1975	Alfidi et al. .	
3,880,158	4/1975	Gurney .	
3,987,000	10/1976	Gleichenhagen et al. .	
4,023,559	5/1977	Gaskell .	
4,080,969	3/1978	Casey et al. .	
4,118,470	10/1978	Casey et al. .	
4,140,126	2/1979	Choudhury .	
4,156,067	5/1979	Gould .	
4,200,939	5/1980	Oster .	
4,272,518	6/1981	Moro et al. .	
4,286,341	9/1981	Greer et al. .	

(List continued on next page.)

FOREIGN PATENT DOCUMENTS

0 149 693	7/1985	European Pat. Off. .	
0 177 330	4/1986	European Pat. Off. .	
0183372	6/1986	European Pat. Off.	623/1
0 202 444	11/1986	European Pat. Off. .	
0 246 638	11/1987	European Pat. Off. .	
292587	11/1988	European Pat. Off. .	
0 537 559 A1	4/1993	European Pat. Off. .	
0 539 751 A1	5/1993	European Pat. Off. .	
0540290A2	5/1993	European Pat. Off. .	
WO89/12478	6/1988	Germany .	
WO 88/02623	4/1988	WIPO .	
WO 90/01969	3/1990	WIPO .	
WO 90/03768	4/1990	WIPO .	
WO 91/01126	2/1991	WIPO .	
WO 91/17731	11/1991	WIPO .	
WO 92/00104	1/1992	WIPO .	
WO 92/00718	1/1992	WIPO .	
WO 92/04393	3/1992	WIPO .	
WO 92/19283	11/1992	WIPO .	
WO 92/21354	12/1992	WIPO .	

(List continued on next page.)

OTHER PUBLICATIONS

D.P. Poppas et al., "Laser Welding in Urethral Surgery: Improved Results with a Protein Solder", The Journal of Urology, vol. 139, Feb., 1988 pp. 415–417.

(List continued on next page.)

Primary Examiner—Debra S. Brittingham
Attorney, Agent, or Firm—Wolf, Greenfield & Sacks, P.C.

[57] **ABSTRACT**

A process for paving or sealing the interior surface of a tissue lumen by entering the interior tissue lument and applying a polymer to the interior surface of the tissue lumen. This is accomplished using a catheter which delivers the polymer to the tissue lument and causes it to conform to the interior surface of the lumen. The polymer can be delivered to the lumen as a monomer or prepolymer solution, or as an at least partially preformed layer on an expansible member.
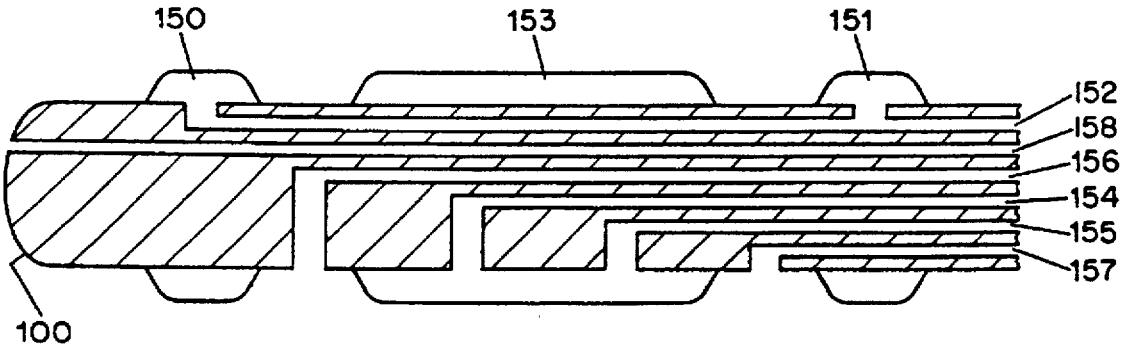
59 Claims, 8 Drawing Sheets