US009173287B1

(12) **United States Patent**
Kim et al.

(10) **Patent No.: US 9,173,287 B1**
(45) **Date of Patent: Oct. 27, 2015**

(54) **FOLDABLE DISPLAY APPARATUS**

(71) Applicant: **LG DISPLAY CO., LTD.**, Seoul (KR)

(72) Inventors: **Yong Hee Kim**, Seoul (KR); **Dal Jae Lee**, Seoul (KR); **Jun Jae Lee**, Paju-si (KR); **Su Chan Kwon**, Seoul (KR)

(73) Assignee: **LG DISPLAY CO., LTD.**, Seoul (KR)

(*) Notice: Subject to any disclaimer, the term of this patent is extended or adjusted under 35 U.S.C. 154(b) by 0 days.

(21) Appl. No.: **14/556,929**

(22) Filed: **Dec. 1, 2014**

(30) **Foreign Application Priority Data**

Sep. 22, 2014 (KR) 10-2014-0125843

(51) **Int. Cl.**

G06F 1/16	(2006.01)
H05K 5/00	(2006.01)
H05K 1/02	(2006.01)
G06F 3/041	(2006.01)
H05K 7/00	(2006.01)
E05D 7/00	(2006.01)
E05F 1/08	(2006.01)
E05D 3/06	(2006.01)
H05K 9/00	(2006.01)
H05K 1/00	(2006.01)

(52) **U.S. Cl.**

CPC ***H05K 1/028*** (2013.01); ***G06F 1/162*** (2013.01); ***G06F 1/1616*** (2013.01); ***G06F 1/1618*** (2013.01); ***G06F 1/1622*** (2013.01); ***G06F 1/1633*** (2013.01); ***G06F 1/1637*** (2013.01); ***G06F 1/1641*** (2013.01); ***G06F 1/1647*** (2013.01); ***G06F 1/1652*** (2013.01); ***H05K 5/0017*** (2013.01); *H05K 2201/055* (2013.01)

(58) **Field of Classification Search**

CPC G06F 1/1616; G06F 1/1618; G06F 1/162; G06F 1/1622; G06F 1/1633; G06F 1/1637; G06F 1/1641; G06F 1/1647; G06F 1/1652; G06F 2203/04102

USPC 361/679.01, 679.04, 679.05, 679.06, 361/679.07, 679.21, 679.22, 679.26, 361/679.27, 679.28, 749; 174/378, 525, 174/254; 16/221, 302, 366; 345/173

See application file for complete search history.

(56) **References Cited**

U.S. PATENT DOCUMENTS

2010/0232100	A1*	9/2010	Fukuma et al.	361/679.01
2013/0010405	A1	1/2013	Rothkopf et al.	
2014/0003006	A1*	1/2014	Ahn	361/749

* cited by examiner

Primary Examiner — Hoa C Nguyen
Assistant Examiner — Binh Tran
(74) *Attorney, Agent, or Firm* — Dentons US LLP

(57) **ABSTRACT**

Disclosed is a foldable display apparatus which can stably maintain a bending curvature of a folded flexible display, and can maintain a bending area of an unfolded flexible display in a plane state. The foldable display apparatus includes a link assembly connected between first and second housings to support a bending area of a display panel, and configured to guide bending of the bending area. The link assembly includes a plurality of bending guide members configured to support the bending area, a plurality of link parts connected to both ends of each of the plurality of bending guide members, and a plurality of link connecting members respectively provided between the plurality of link parts, and configured to connect two adjacent link parts.
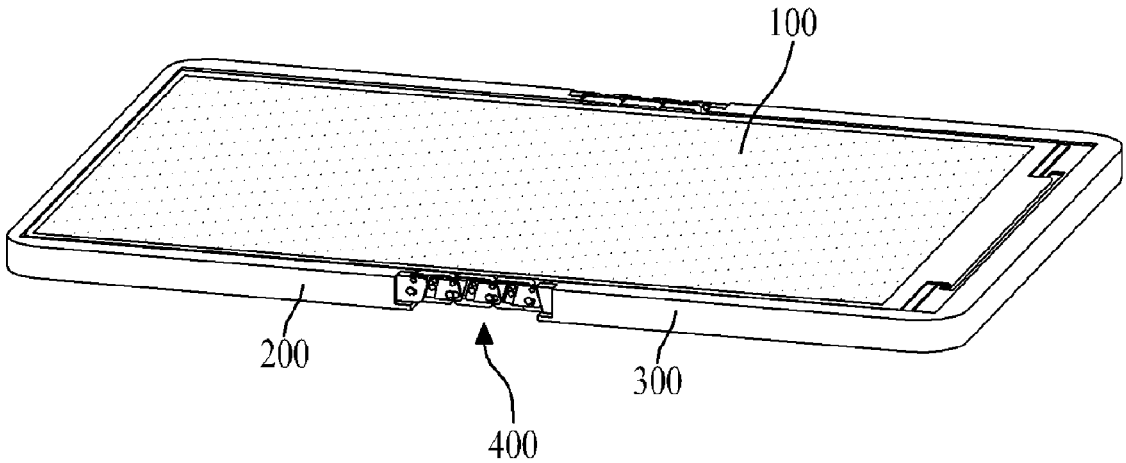
18 Claims, 8 Drawing Sheets