US007654687B2

(12) **United States Patent**
Tsai et al.

(10) **Patent No.: US 7,654,687 B2**
(45) **Date of Patent: Feb. 2, 2010**

(54) **LIGHT MIXER AND BACKLIGHT MODULE HAVING THE SAME**

(75) Inventors: **Shen-Yin Tsai**, Tainan (TW); **Chin-Lung Kuo**, Tainan (TW); **Yao-Yuan Kuo**, Tainan (TW); **I-Chang Lee**, Tainan (TW)

(73) Assignee: **Chi Lin Technology Co., Ltd.**, Tainan County (TW)

(*) Notice: Subject to any disclaimer, the term of this patent is extended or adjusted under 35 U.S.C. 154(b) by 241 days.

(21) Appl. No.: **11/714,827**

(22) Filed: **Mar. 7, 2007**

(65) **Prior Publication Data**

US 2008/0137335 A1 Jun. 12, 2008

(30) **Foreign Application Priority Data**

Dec. 6, 2006 (TW) ..... 95145404 A

(51) **Int. Cl.**
F21V 9/08 (2006.01)

(52) **U.S. Cl.** **362/237**; 362/231; 362/246; 362/97.3; 257/98; 349/62

(58) **Field of Classification Search** 362/97, 362/231, 237, 240, 246; 257/89, 98; 349/61, 349/62

See application file for complete search history.

(56) **References Cited**

U.S. PATENT DOCUMENTS

5,249,104 A * 9/1993 Mizobe 362/605
6,404,131 B1 * 6/2002 Kawano et al. 362/245
6,964,497 B2 * 11/2005 Greiner 362/241
7,063,430 B2 * 6/2006 Greiner 362/30
7,222,993 B2 * 5/2007 Kikuchi et al. 362/300
7,441,913 B2 * 10/2008 Bayersdorfer 362/29
7,458,714 B2 * 12/2008 Chang 362/626
2002/0097578 A1 7/2002 Greiner
2005/0259195 A1 11/2005 Koganezawa
2006/0013002 A1 * 1/2006 Coushaine et al. 362/308
2006/0262538 A1 * 11/2006 Li et al. 362/296
2007/0086179 A1 * 4/2007 Chen et al. 362/27
2007/0147073 A1 * 6/2007 Sakai et al. 362/607

* cited by examiner

Primary Examiner—Ismael Negron
(74) *Attorney, Agent, or Firm*—Volentine & Whitt, PLLC

(57) **ABSTRACT**

A light mixer includes a light mixing plate, a plurality of light sources, a plurality of upper reflecting layers, a lower reflecting layer, and a semi-permeable layer. The light mixing plate has an upper surface, a lower surface, a peripheral surface, and a plurality of receiving holes. The light sources are respectively located in the receiving holes. The upper reflecting layers are respectively located right above the light sources. The lower reflecting layer is located on the lower surface of the light mixing plate. The semi-permeable layer wraps the peripheral surface of the light mixing plate. A diffuser is located above the light mixers.
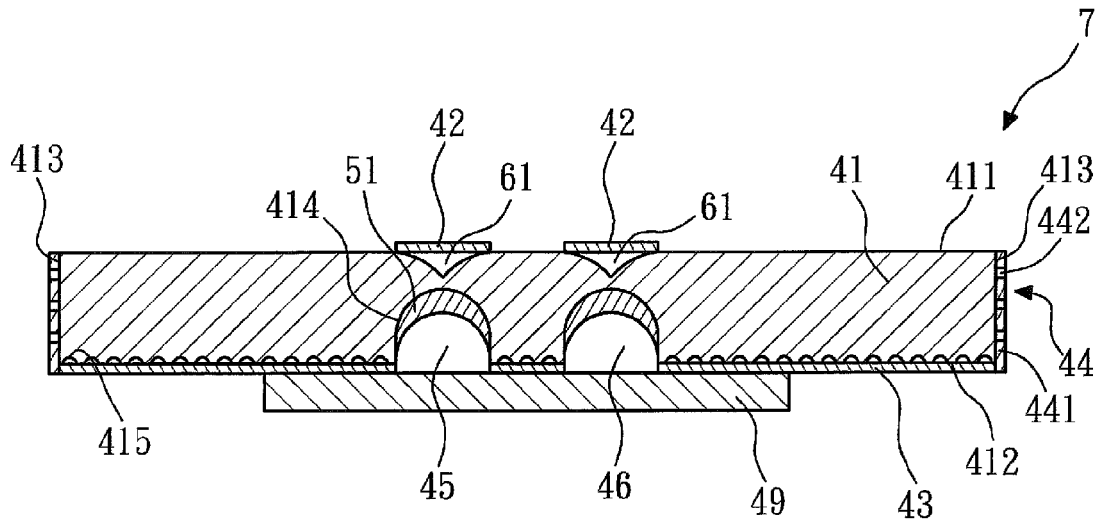
33 Claims, 6 Drawing Sheets