April 29, 1969 G. W. GOETZE ET AL 3,441,787

SECONDARY ELECTRON CONDUCTION STORAGE SYSTEM

Filed April 27, 1967

FIG. 1.

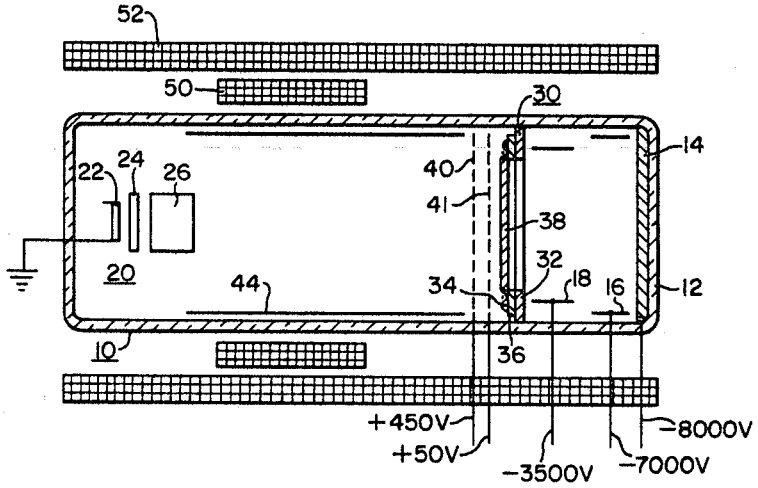

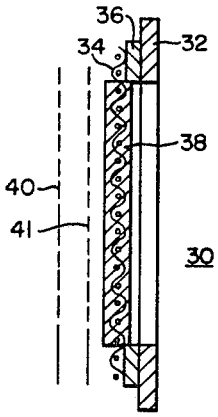

FIG. 2.

WITNESSES

Theodore F. Wrobel

James F. Young

INVENTORS
Gerhard W. Goetze
and Alvin H. Boerio

BY Charles F. Renz

ATTORNEY