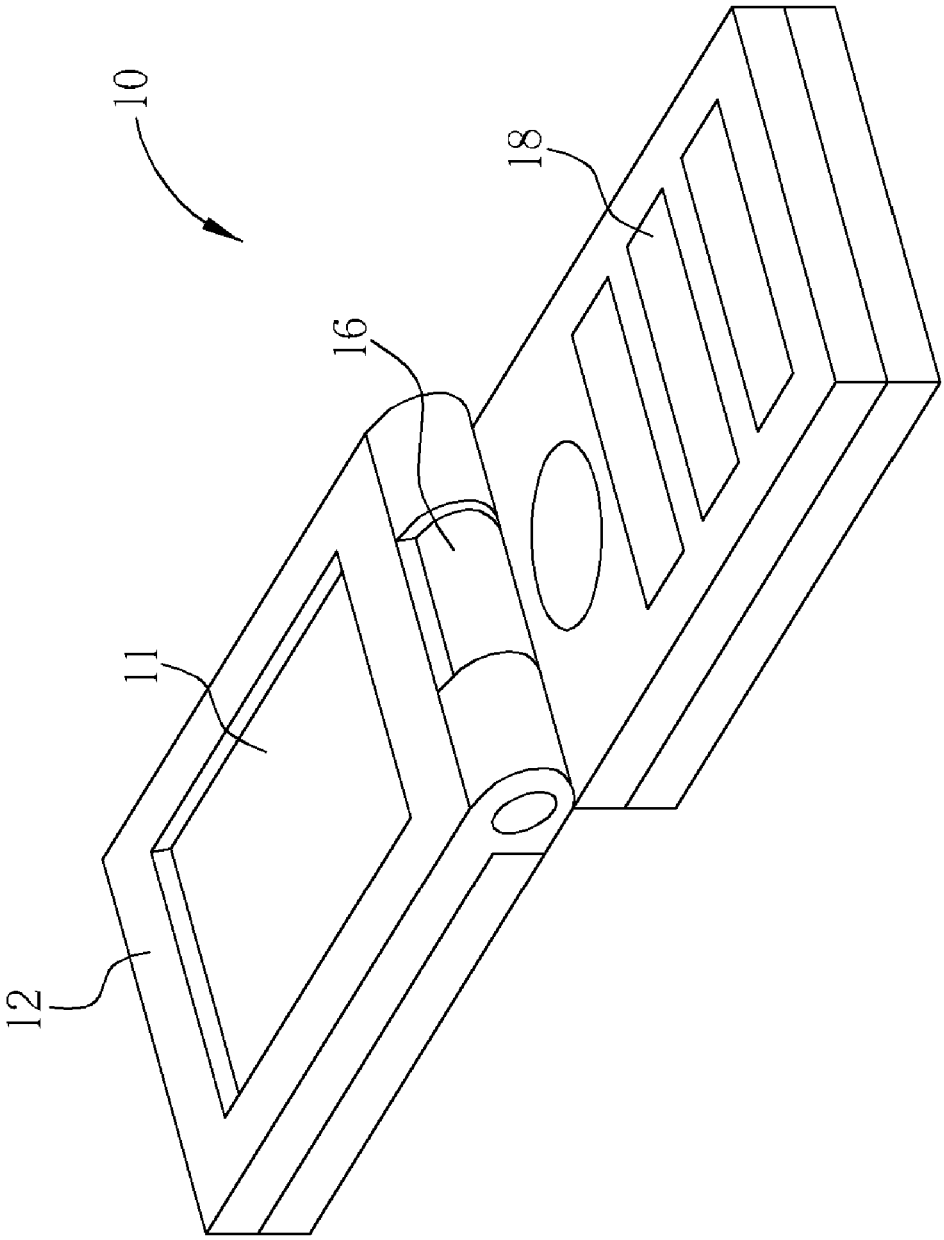

Fig. 1 Prior Art