Fig. 1.

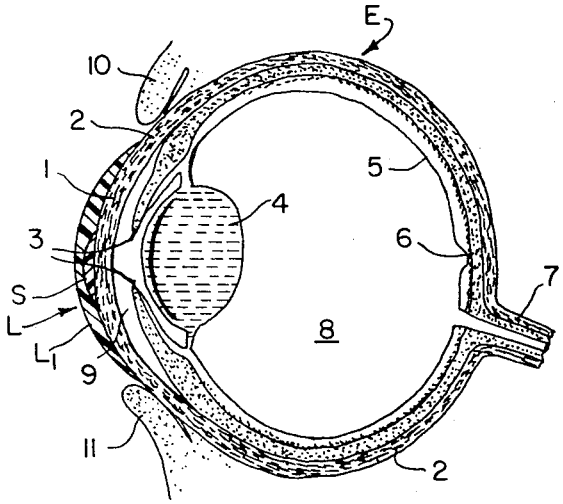

Fig. 2.

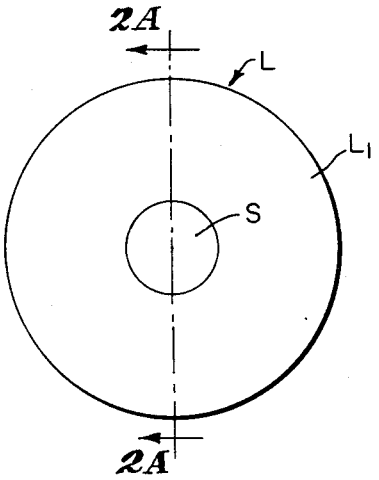

Fig. 2A.

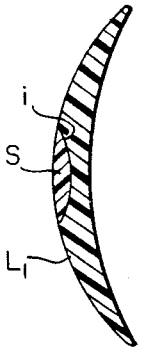

Fig. 2B.

Fig. 3.

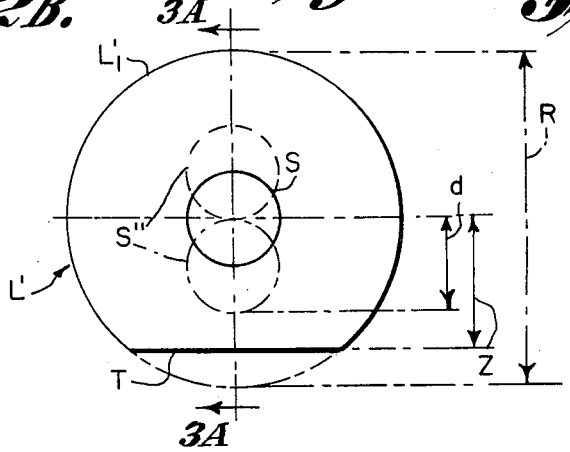

Fig. 3A.

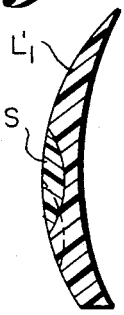

Fig. 4.

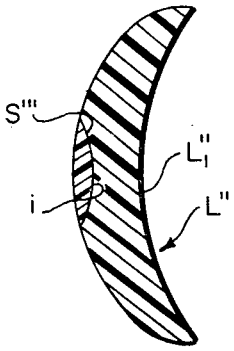

INVENTOR
CLAUD A. KENDALL

BY Shoemaker and Mattare

ATTORNEYS