Nov. 2, 1971 T. E. DEARTH 3,616,487

BOX HINGE

Filed March 10, 1969

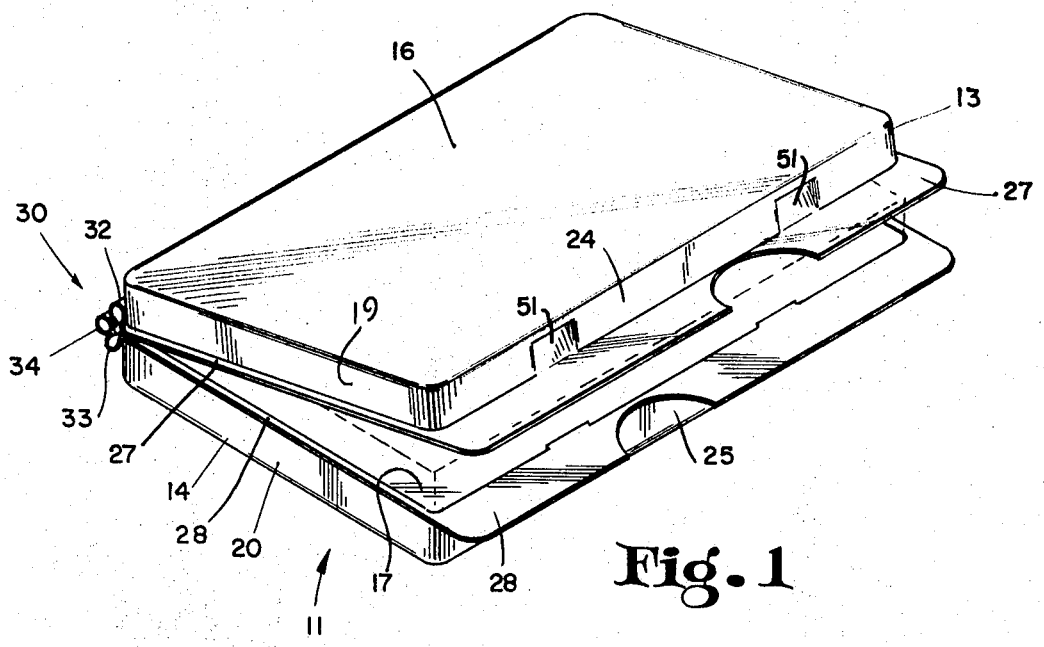

Fig. 1

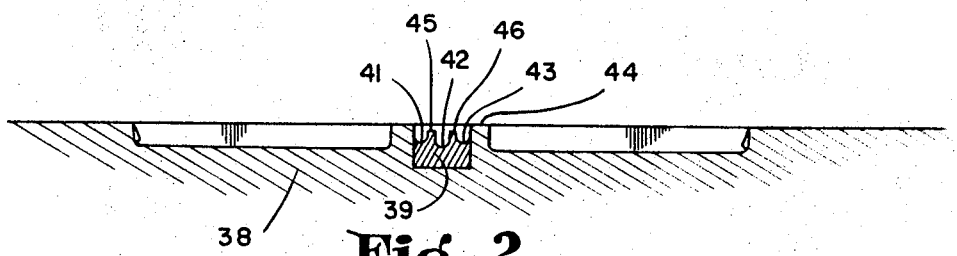

Fig. 2

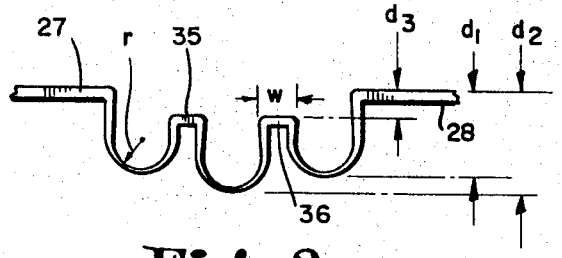

Fig. 3

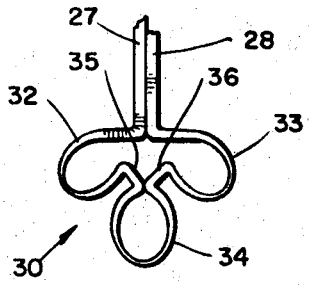

Fig. 4

INVENTOR.
TIMOTHY E. DEARTH
BY Weston L. Newman
ATTORNEY