US009411287B2

(12) **United States Patent**
Nozaki

(10) **Patent No.: US 9,411,287 B2**
(45) **Date of Patent: Aug. 9, 2016**

(54) **TECHNIQUE FOR REDUCING POWER CONSUMED BY ELECTRIC EQUIPMENT**

(71) Applicant: **CANON KABUSHIKI KAISHA**, Tokyo (JP)

(72) Inventor: **Tetsuya Nozaki**, Kashiwa (JP)

(73) Assignee: **CANON KABUSHIKI KAISHA**, Tokyo (JP)

(*) Notice: Subject to any disclaimer, the term of this patent is extended or adjusted under 35 U.S.C. 154(b) by 241 days.

(21) Appl. No.: **14/146,455**

(22) Filed: **Jan. 2, 2014**

(65) **Prior Publication Data**

US 2014/0192574 A1 Jul. 10, 2014

(30) **Foreign Application Priority Data**

Jan. 10, 2013 (JP) 2013-002839

(51) **Int. Cl.**

H02M 3/24	(2006.01)
H02M 5/42	(2006.01)
H02M 7/04	(2006.01)
H02M 7/68	(2006.01)
G03G 15/00	(2006.01)
H02M 1/00	(2006.01)

(52) **U.S. Cl.**

CPC ***G03G 15/5004*** (2013.01); ***G03G 15/80*** (2013.01); *H02M 2001/0006* (2013.01)

(58) **Field of Classification Search**

CPC ... G03G 15/80; G03G 15/5004; Y02B 70/16; H02M 7/06; H02M 1/32; H02M 1/36; H02M 1/322; H02M 1/325; H02M 1/327; H02M 1/34; H02M 3/335; H02M 3/33507; H02M 3/3353; H02M 3/33561; H02M 3/33569; H02M 3/337; H02M 3/338; H02M 2001/0032; H02M 2001/0035; G06F 1/325; G06F 1/3287; G06F 1/3234; G06F 1/32; G06F 1/3203; G06F 1/3243; G06F 1/3246; G06F 1/3293; G06F 1/3296; H04N 1/00885; H04N 1/00888; H04N 1/00899

USPC 363/15–21.18, 49–56.12, 77–84, 89, 363/106, 108, 109, 125–127; 323/205–211, 323/222–226, 271–276, 282–288, 351, 323/901; 399/37, 88–90; 713/300–340; 307/23, 38–41, 125; 361/90

See application file for complete search history.

(56) **References Cited**

U.S. PATENT DOCUMENTS

5,699,218 A * 12/1997 Kadah H01H 9/542 361/13
2011/0064445 A1* 3/2011 Yashiro G03G 15/5004 399/88

(Continued)

FOREIGN PATENT DOCUMENTS

JP 9-200954 A 7/1997
JP 2002-19232 A 1/2002

Primary Examiner — Timothy J Dole
Assistant Examiner — Carlos Rivera-Perez
(74) *Attorney, Agent, or Firm* — Fitzpatrick, Cella, Harper & Scinto

(57) **ABSTRACT**

When an image forming apparatus shifts to a power saving mode, a controller unit further reduces power consumption by switching AC current on/off every predetermined amount of time. When AC current input from a commercial AC power supply is turned off, a DC voltage generating circuit normally can no longer supply a DC voltage, rendering the controller unit unable to operate. Accordingly, the controller unit operates using a charge accumulated in a smoothing capacitor while the AC current is not being supplied. An AC cutting circuit is switched on before a both-end voltage at the smoothing capacitor drops below a lower limit of operation voltage of the DC voltage generating circuit, and the smoothing capacitor is recharged.
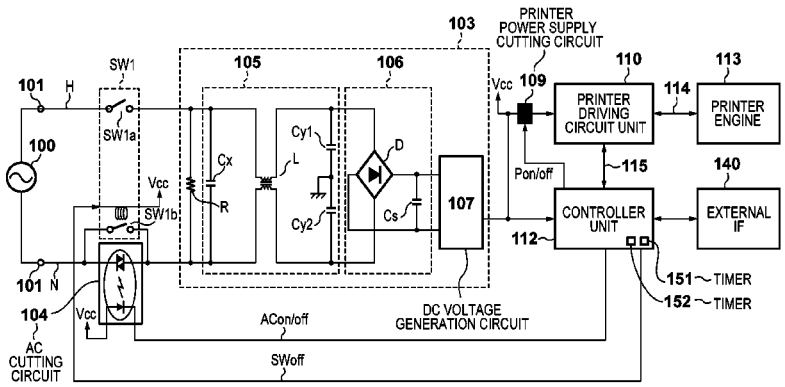
9 Claims, 9 Drawing Sheets